MODEL NO.	14HS13-1004S-EGS	DWG NO.	A3079

CUSTOMER'S MODEL: NO MODEL
END COVER COLOR: BLACK

REV.	REVISION RECORD	BY	DATE
0	ORIGIN	LDJ	3.28.2024

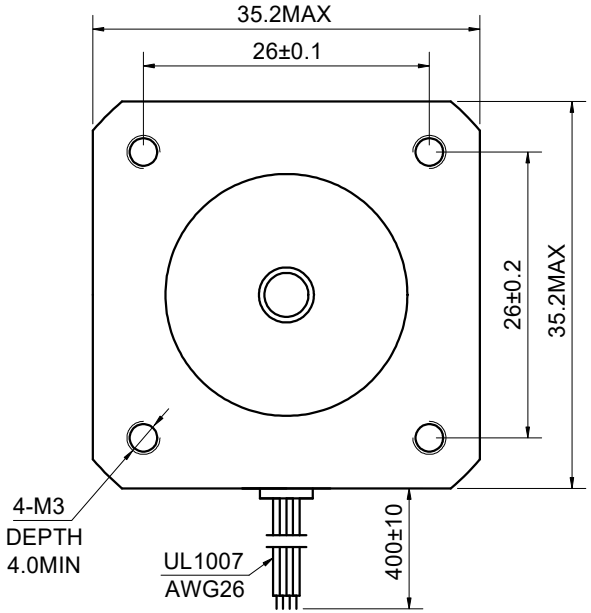

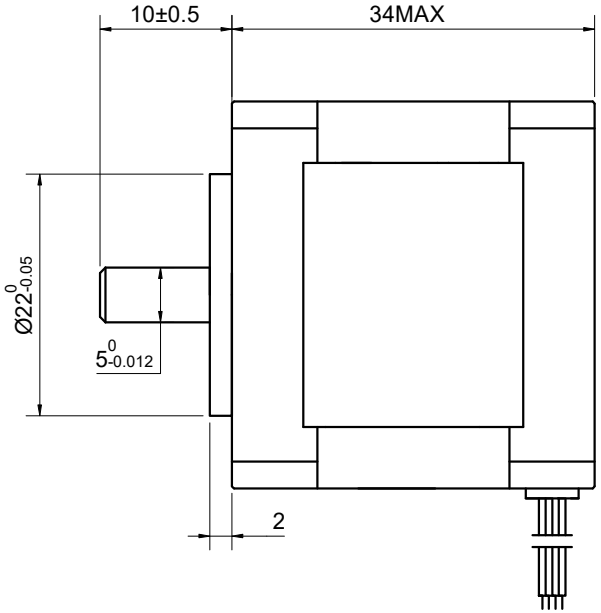

CONNECTION / SPECIFICATION	BIPOLAR
AMPS/PHASE	1.00
RESISTANCE/PHASE(Ohms)@25°C	4.20±10%
INDUCTANCE/PHASE(mH)@1KHz	6.00±20%
HOLDING TORQUE(Nm)[lb-in]	0.18[1.60]
STEP ANGLE(°)	1.80
STEP ACCURACY(NON-ACCUM)	±5.00%
ROTOR INERTIA(g-cm²)	14.00
WEIGHT(Kg)[lb]	——
AMBIENT TEMPERATURE	-10°C~50°C[14°F~122°F]
INSULATION CLASS	B 130°C[266°F]
TEMPERATURE RISE	MAX.80°C

COMMENT:
1.TMBF 6000h OR MORE @ 24V/300RPM
2.INSULATION RESISTANCE
(NORMAL TEMPERATURE AND HUMIDITY): 100 Mohm
3.DIELECTRIC STRENGTH 500VAC FOR 1MIN.(BETWEEN THE MOTOR COILS AND THE MOTOR CASE)

MOTOR CONNECTION			
PIN NO	BIPOLAR	LEADS	WINDING
1	A+	BLK	A+
2	A -	GRN	
3	B+	RED	A-
4	B -	BLU	B+ B-

FULL STEP 2 PHASE-Ex.,WHEN FACING MOUNTING END (X)

STEP	A+	B+	A-	B-	↓ CW	↑ CCW
1	+	+	-	-		
2	-	+	+	-		
3	-	-	+	+		
4	+	-	-	+		

DIMENSIONS ARE IN MILLIMETERS.
TOLERANCES AS BELOW:

DECIMALS		ANGLES
X	±0.5	±2°
X.X	±0.25	
X.XX	±0.13	

THIRD ANGLE PROJECTION

STEPPERONLINE®

STEPPER MOTOR

THIS DOCUMENT SHALL NOT BE REPRODUCED NOR SHALL THE INFORMATION CONTAINED HEREIN BE USED BY OR DISCLOSED TO OTHERS UNLESS EXPRESSLY AUTHORIZED IN BY WRITING STEPPERONLINE.

SIGNATURE		DATE
DRN	LDJ	3.28.2024
APVD	YSX	3.28.2024

14HS13-1004S-EGS

REV.	0	SCALE	3：2	DWG NO.	A3079