MODEL NO.	RYG17-G10	DWG NO.	A2818

REV.	REVISION RECORD	BY	DATE
0	ORIGIN	YSX	1.22.2024

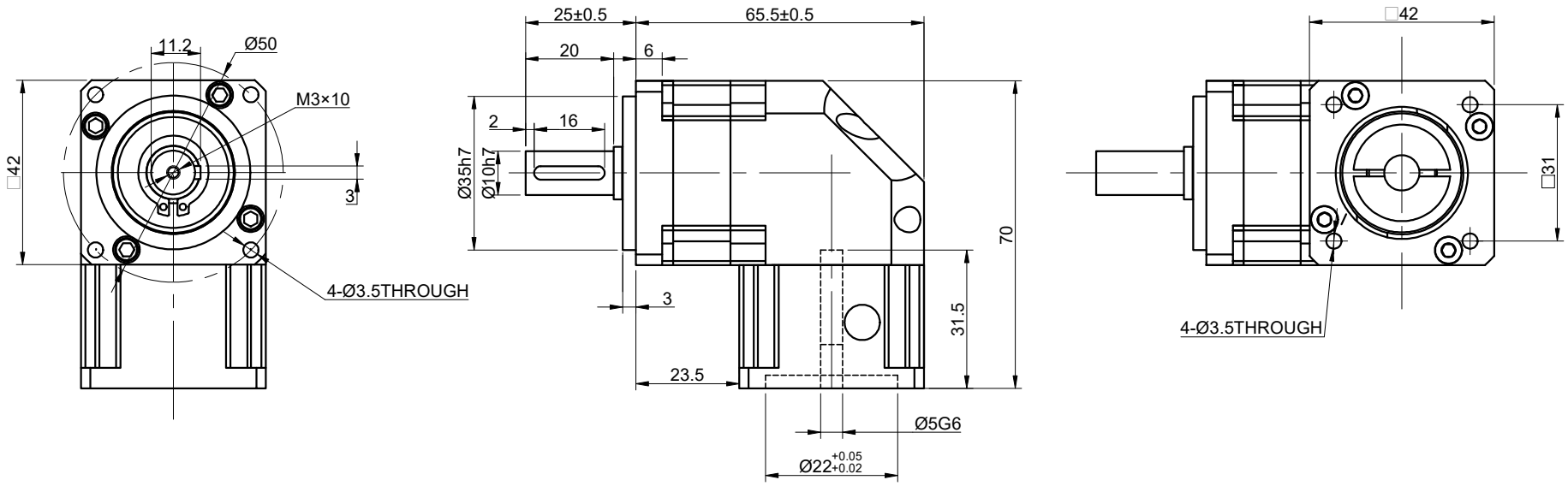

SPECIFICATION \ CONNECTION	VALUE
GEAR RATIO	10
EFFICIENCY	96%
BACKLASH@NO-LOAD(arcmin)	<=15
MAX.PERMISSIBLE TORQUE(Nm)[lb-in]	5[44.2]
MOMENT PERMISSIBLE TORQUE(Nm)[lb-in]	10[88.5]
SHAFT MAXIMUM AXIAL LOAD(N)	80
SHAFT MAXIMUM RADIAL LOAD(N)	260
GEARBOX MATCHING MOTOR'S INPUT SHAFT LENGTH (mm)	15-30
RATED INPUT SPEED(RPM)	3000
MAX. INPUT SPEED(RPM)	6000
NOISE(dB)	<=60
WATERPROOF RATING	IP54
LIFE(h)	20000
WORKING TEMPERATURE	-10°C~90°C[14°F~212°F]

DIMENSIONS ARE IN MILLIMETERS.
TOLERANCES AS BELOW:

DECIMALS		ANGLES
X	±0.5	±2°
X.X	±0.25	
X.XX	±0.13	

THIRD ANGLE PROJECTION

SIGNATURE		DATE
DRN	YSX	1.22.2024
APVD	LDJ	1.22.2024

STEPPERONLINE®

GEARBOX

RYG17-G10

REV.	0	SCALE	1:1	DWG NO.	A2818