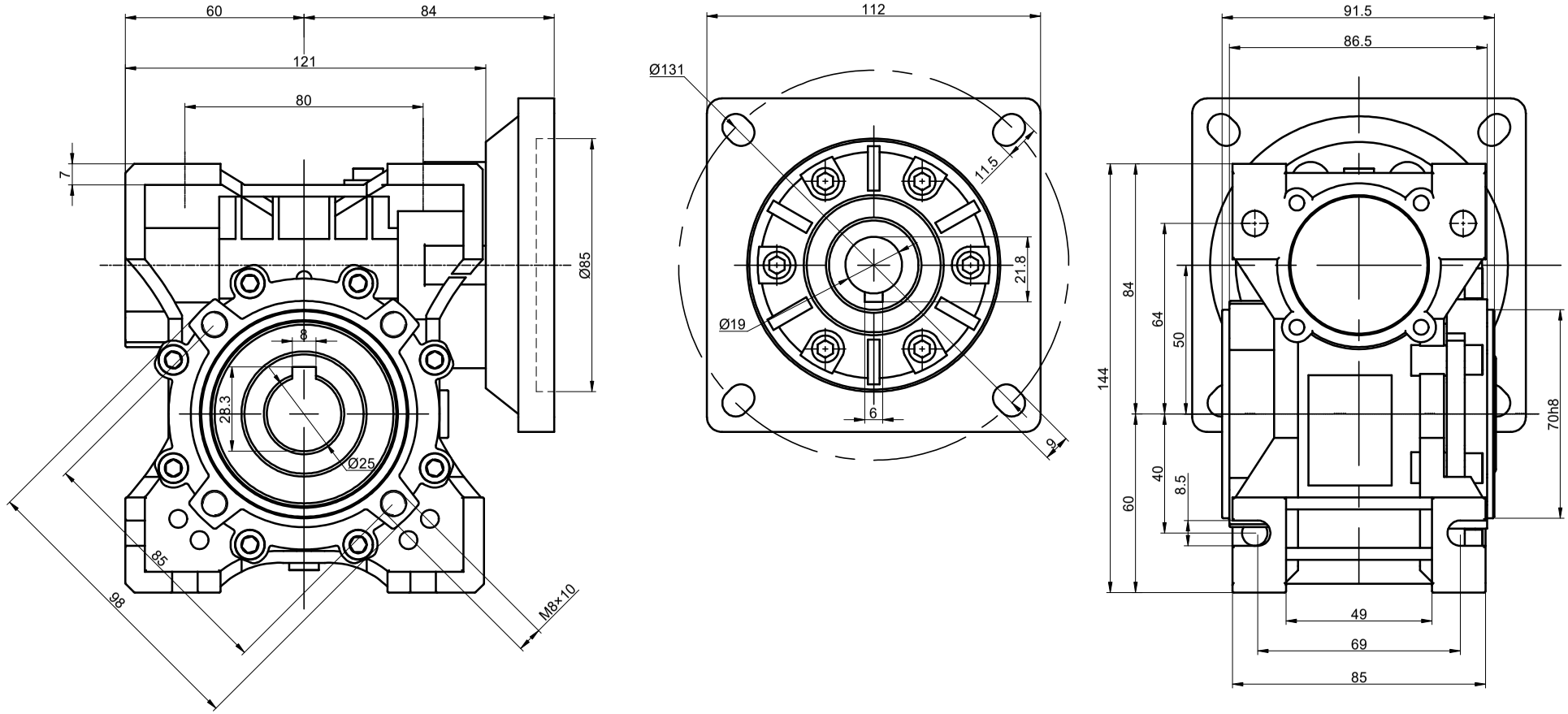

STEPPERONLINE®		APVD	HW	2.28.2024
		CHKD		
	1:2	DRN	LDJ	2.28.2024
	SCALE	SIGNATURE		DATE

WORM GEAR SPEED REDUCER

NMRVS50-G10-D19