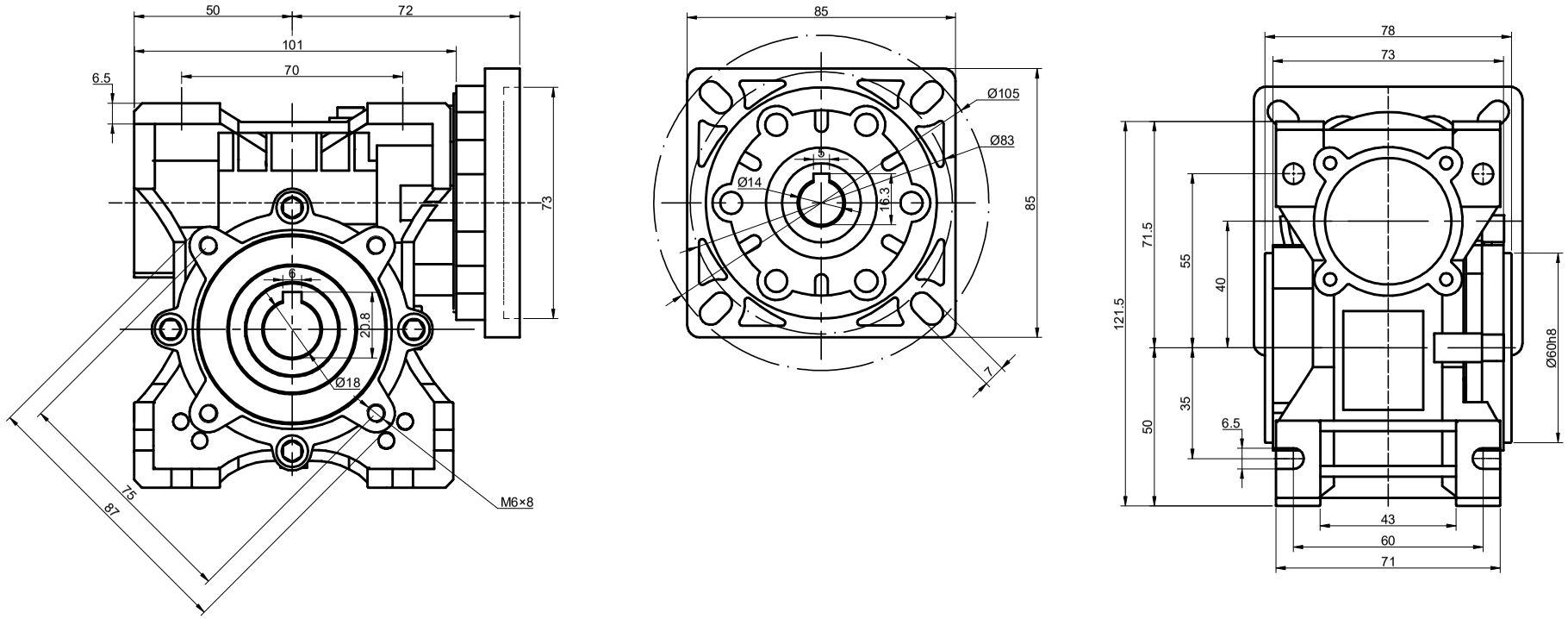


| | | | | |
|---|---|---|---|---|
| STEPPERONLINE® | | APVD | LDJ | 2.28.2024 |
| | | CHKD | | |
| | 1:2 | DRN | HW | 2.28.2024 |
| | SCALE | SIGNATURE | | DATE |

# WORM GEAR SPEED REDUCER

## NMRVS40-G10-D14