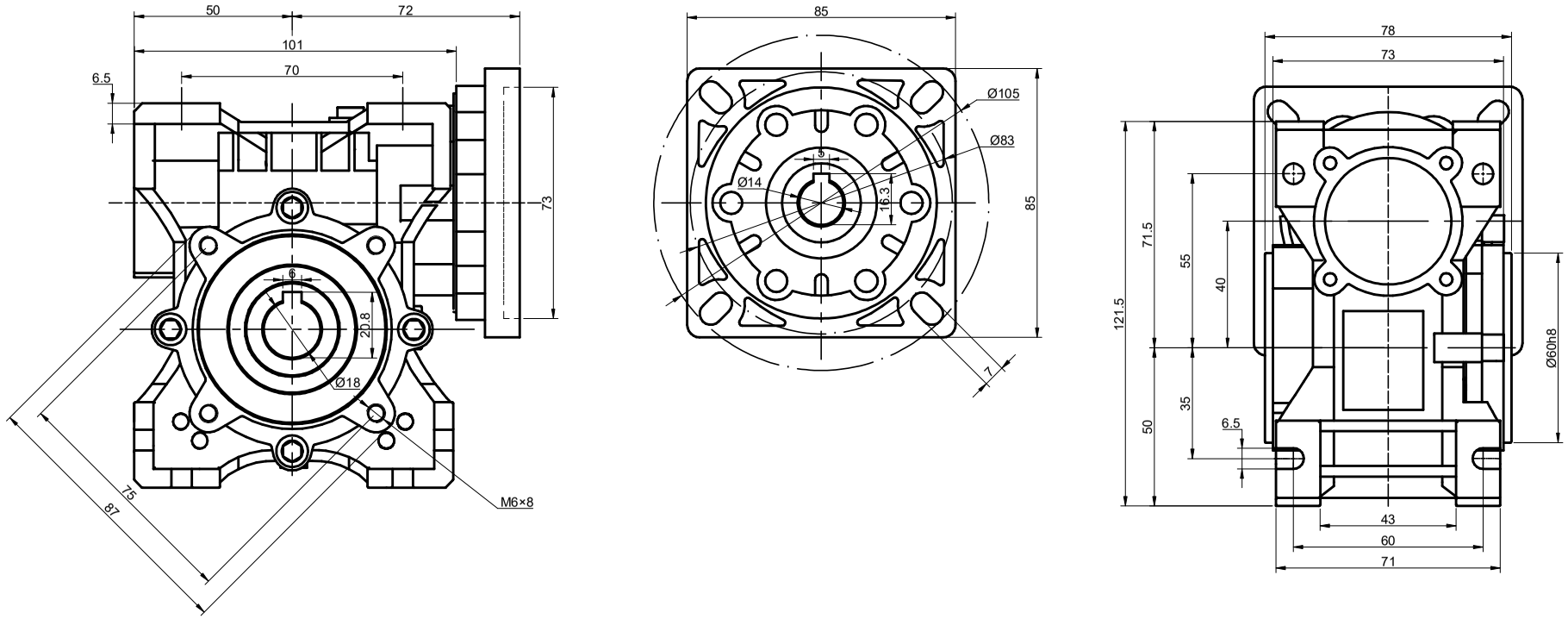

STEPPERONLINE®		APVD	LDJ	2.28.2024
		CHKD		
	1:2	DRN	HW	2.28.2024
	SCALE	SIGNATURE		DATE

WORM GEAR SPEED REDUCER

NMRVS40-G5-D14