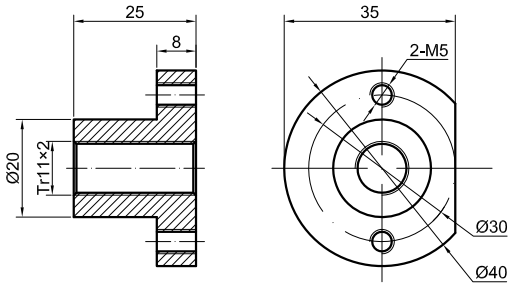

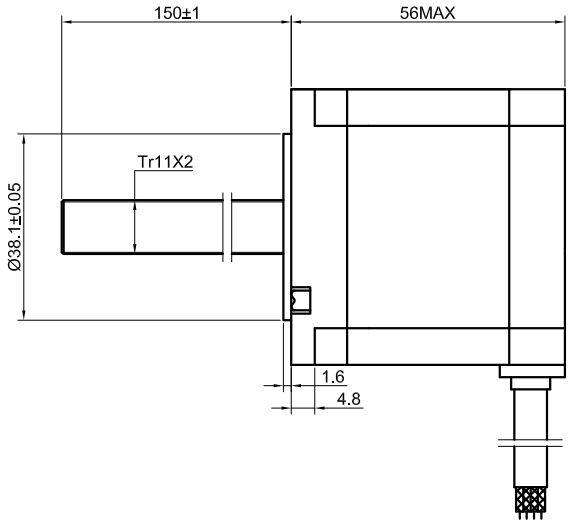

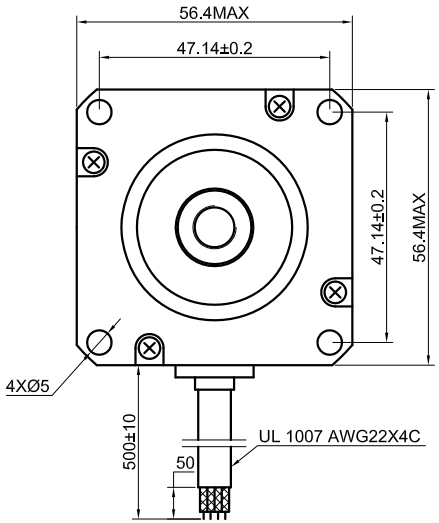

SPECIFICATION / CONNECTION	BIPOLAR
AMPS/PHASE	2.00
RESISTANCE/PHASE(Ohms)@25°C	3.60±10%
INDUCTANCE/PHASE(mH)@1KHz	12.00±20%
HOLDING TORQUE(Nm)[lb-in]	1.20[10.62]
LINEAR TRAVEL/STEP(mm)	0.01
STEP ANGLE(°)	1.80
STEP ACCURACY(NON-ACCUM)	±5.00%
ROTOR INERTIA(g-cm²)	280.00
WEIGHT(Kg)[lb]	0.65[1.43]

TEMPERATURE RISE:MAX.80°C（MOTOR STANDSTILL;FOR 2PHASE ENERGIZED）

AMBIENT TEMPERATURE -10°C~50°C[14°F~122°F]

INSULATION RESISTANCE 100 Mohm（UNDER NORMAL TEMPERATURE AND HUMIDITY）

INSULATION CLASS B 130°C[266°F]

DIELECTRIC STRENGTH 500VAC FOR 1MIN.(BETWEEN THE MOTOR COILS AND THE MOTOR CASE)

AMBIENT HUMIDITY MAX.85%(NO CONDENSATION)

TYPE OF CONNECTION (EXTERN)		MOTOR	
PIN NO	BIPOLAR	LEADS	WINDING
1	A —	BLK	A
2	A\ —	GRN	A\
3	B —	RED	B
4	B\ —	BLU	B\

FULL STEP 2 PHASE-Ex. ,
WHEN FACING MOUNTING END (X)

STEP	A	B	A\	B\		CCW
1	+	+	-	-	↓	↑
2	-	+	+	-		
3	-	-	+	+		
4	+	-	-	+	CW	

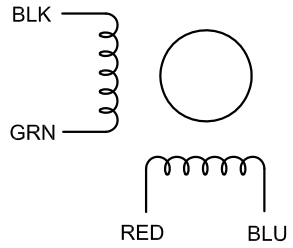

STEPPERONLINE®		APVD		10.19.2021
		CHKD		
	1:1.5	DRN		
	SCALE	SIGNATURE		DATE

STEPPER MOTOR

23E22S2004AJ-150RS
(23LS22-2004E-150T)