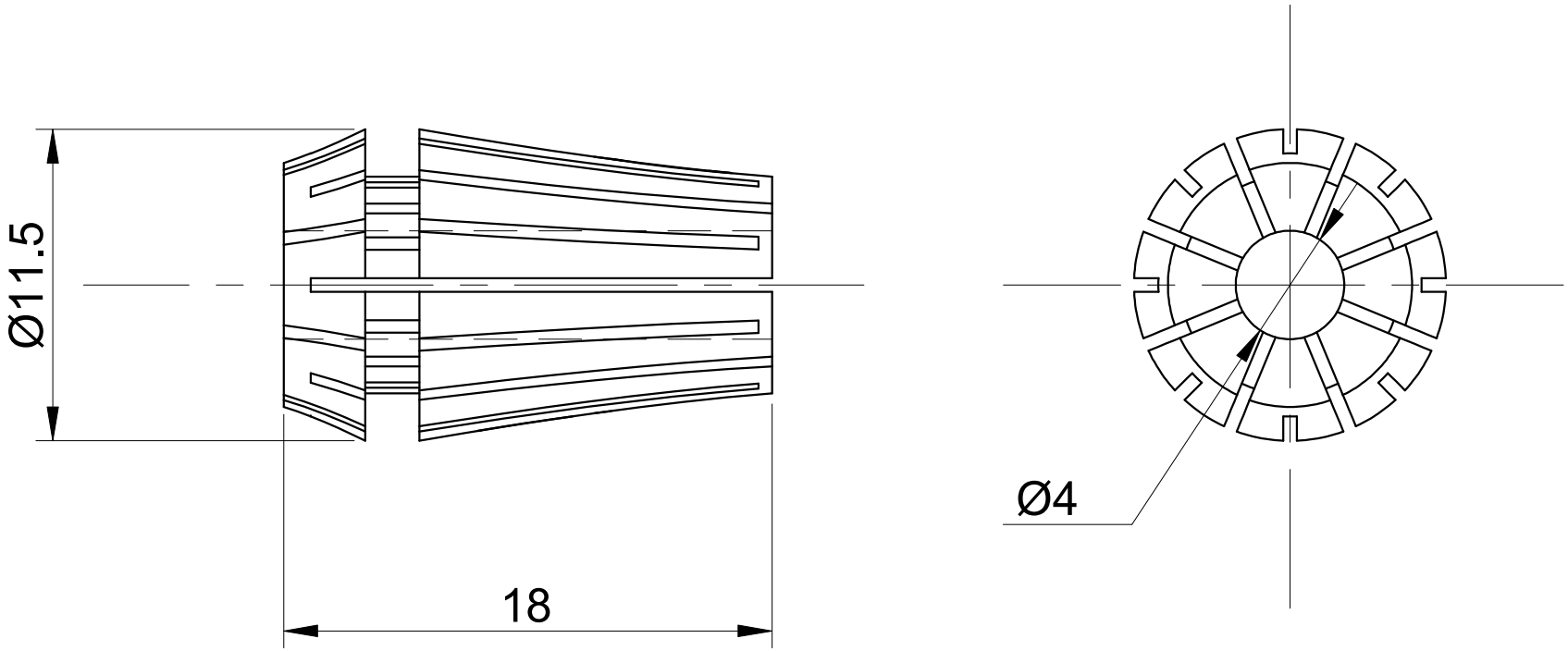

STEPPERONLINE®		APVD	ZPJ	11.29.2023	SPINDLE CHUCK
		CHKD			
	1:1	DRN	LDJ	11.28.2023	ER11-D4
	SCALE	SIGNATURE		DATE	