MODEL NO.	17N13S0404MB2-320RS	DWG NO.	A0948

CUSTOMER'S MODEL: NO MODEL
END COVER COLOR: BLACK

REV.	REVISION RECORD	BY	DATE
0	ORIGIN	ZPJ	9.21.2023

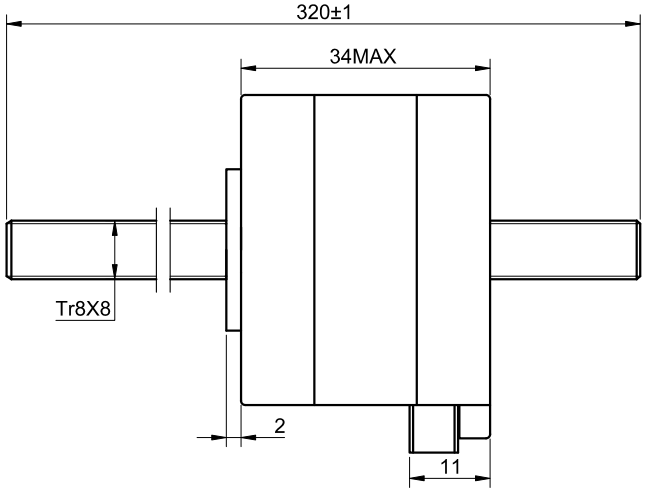

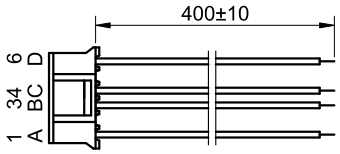

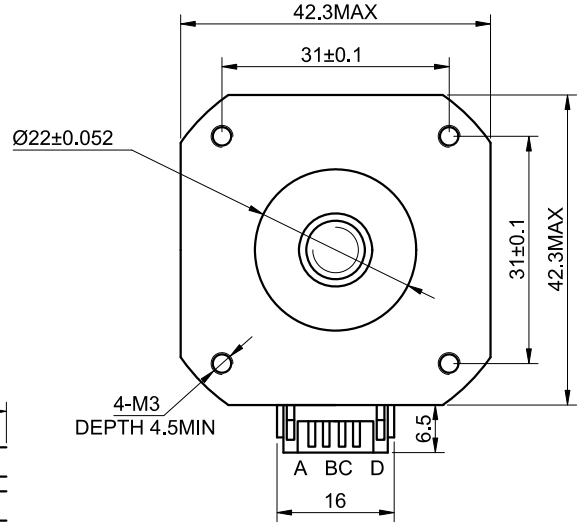

SPECIFICATION \ CONNECTION	BIPOLAR
AMPS/PHASE	0.40
RESISTANCE/PHASE(Ohms)@25°C	30.00±10%
INDUCTANCE/PHASE(mH)@1KHz	37.00±20%
HOLDING TORQUE(Nm)[lb-in]	0.26[2.30]
STEP ANGLE(°)	1.80
STEP ACCURACY(NON-ACCUM)	±5.00%
LEAD(mm)	8
LINEAR TRAVEL/STEP(mm)	0.04
AMBIENT TEMPERATURE	-10°C~50°C[14°F~122°F]
INSULATION CLASS	B 130°C[266°F]
TEMPERATURE RISE	MAX.80°C
AMBIENT HUMIDITY	MAX.85%

COMMENT:
1.TMBF 6000h OR MORE @ 24V/300RPM
2.INSULATION RESISTANCE
(NORMAL TEMPERATURE AND HUMIDITY): 100 Mohm
3.DIELECTRIC STRENGTH 500VAC FOR 1MIN.(BETWEEN THE MOTOR COILS AND THE MOTOR CASE)

MOTOR CONNECTION

PIN NO	BIPOLAR	LEADS	WINDING
1	A+	RED	A+
2	A -	GRY	A-
3	B+	YEL	B+ B-
4	B -	GRN	

FULL STEP 2 PHASE-Ex.,WHEN FACING MOUNTING END (X)

STEP	A+	B+	A-	B-
1	+	+	-	-
2	-	+	+	-
3	-	-	+	+
4	+	-	-	+

↓ CW ↑ CCW

DIMENSIONS ARE IN MILLIMETERS.
TOLERANCES AS BELOW:

DECIMALS		ANGLES
X	±0.5	±2°
X.X	±0.25	
X.XX	±0.13	

THIRD ANGLE PROJECTION

THIS DOCUMENT SHALL NOT BE REPRODUCED NOR SHALL THE INFORMATION CONTAINED HEREIN BE USED BY OR DISCLOSED TO OTHERS UNLESS EXPRESSLY AUTHORIZED IN BY WRITING STEPPERONLINE.

	SIGNATURE	DATE
DRN	ZPJ	9.21.2023
APVD	LDJ	9.21.2023

STEPPERONLINE®

LINEAR ACTUATOR

17N13S0404MB2-320RS

REV.	0	SCALE	1:1	DWG NO.	A0948