MODEL NO.	23HS30-2904S-MG5	DWG NO.	A2384

CUSTOMER'S MODEL: NO MODEL
END COVER COLOR: BLACK

REV.	REVISION RECORD	BY	DATE
0	ORIGIN	LDJ	8.10.2023

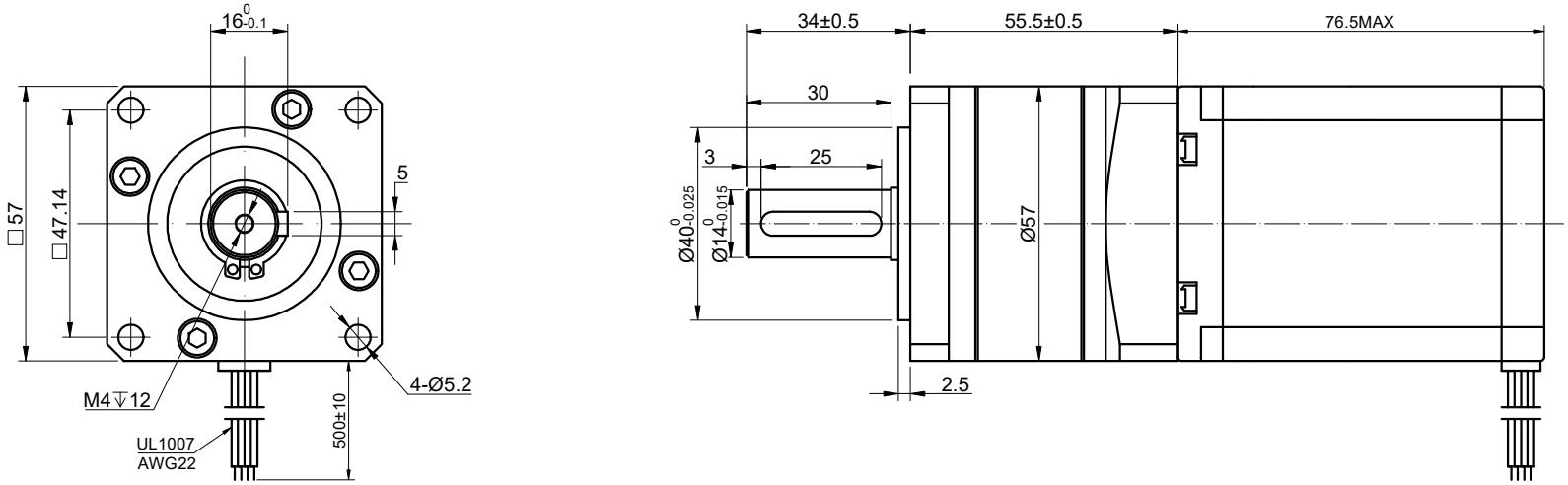

SPECIFICATION \ CONNECTION	BIPOLAR
AMPS/PHASE	2.90
RESISTANCE/PHASE(Ohms)@25°C	1.13±10%
INDUCTANCE/PHASE(mH)@1KHz	4.80±20%
HOLDING TORQUE w/o GEARBOX(Nm)[lb-in]	1.89[16.73]
STEP ANGLE w/o GEARBOX(°)	1.80
GEAR RATIO	5
GEAR EFFICIENCY	90%
BACKLASH@NO-LOAD	<=30
MAX.PERMISSIBLE TORQUE(Nm)	25.00[221.27]
MOMENT PERMISSIBLE TORQUE(Nm)	50.00[442.54]
AMBIENT TEMPERATURE	-10°C~50°C[14°F~122°F]
INSULATION CLASS	B 130°C[266°F]
TEMPERATURE RISE	MAX.80°C

COMMENT:
1.DYNAMIC AXIAL LOAD: 50N MAX
2.DYNAMIC RADIAL LOAD @ SHAFT LENGTH 20mm: 100N MAX
3.TMBF 6000h OR MORE @ 24V/300RPM
4.INSULATION RESISTANCE
(NORMAL TEMPERATURE AND HUMIDITY): 100 Mohm
5.DIELECTRIC STRENGTH 500VAC FOR 1MIN.(BETWEEN THE MOTOR COILS AND THE MOTOR CASE)

MOTOR CONNECTION			
PIN NO	BIPOLAR	LEADS	WINDING
1	A+	BLK	A+
2	A -	GRN	
3	B+	RED	A-
4	B -	BLU	B+ B-

FULL STEP 2 PHASE-Ex.,WHEN FACING MOUNTING END (X)

STEP	A+	B+	A-	B-
1	+	+	-	-
2	-	+	+	-
3	-	-	+	+
4	+	-	-	+

↓ CW ↑ CCW

DIMENSIONS ARE IN MILLIMETERS.
TOLERANCES AS BELOW:

DECIMALS		ANGLES
X	±0.5	±2°
X.X	±0.25	
X.XX	±0.13	

THIRD ANGLE PROJECTION

STEPPERONLINE®

STEPPER MOTOR

23HS30-2904S-MG5

THIS DOCUMENT SHALL NOT BE REPRODUCED NOR SHALL THE INFORMATION CONTAINED HEREIN BE USED BY OR DISCLOSED TO OTHERS UNLESS EXPRESSLY AUTHORIZED IN BY WRITING STEPPERONLINE.

	SIGNATURE	DATE
DRN	LDJ	8.10.2023
APVD	ZPJ	8.10.2023

REV.	0	SCALE	1:1	DWG NO.	A2384