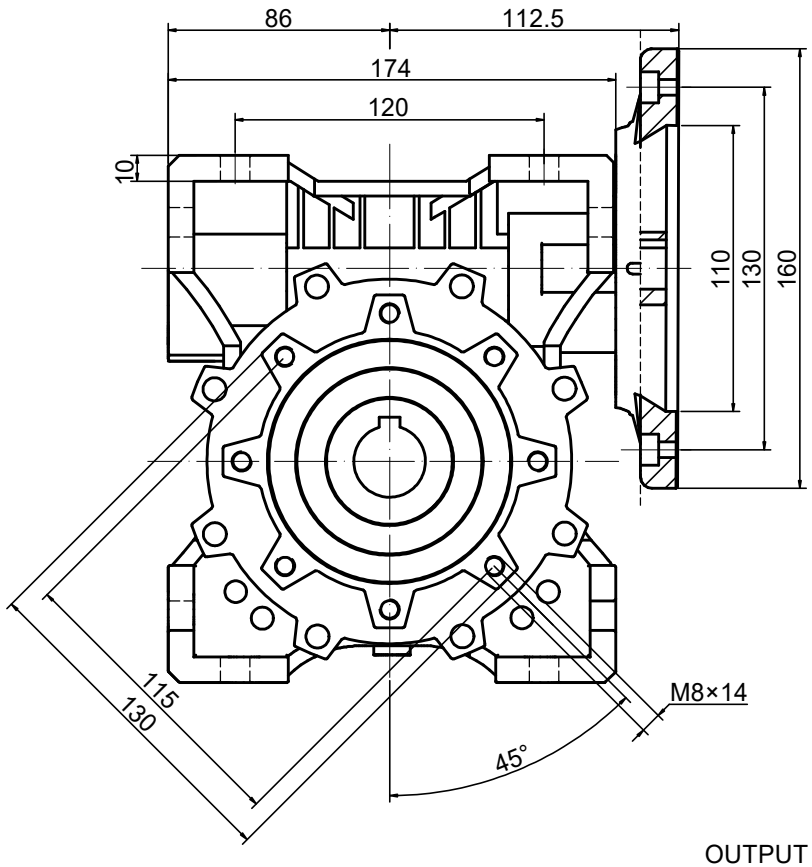

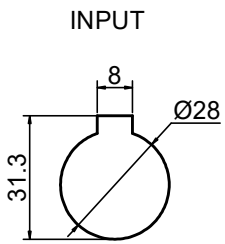

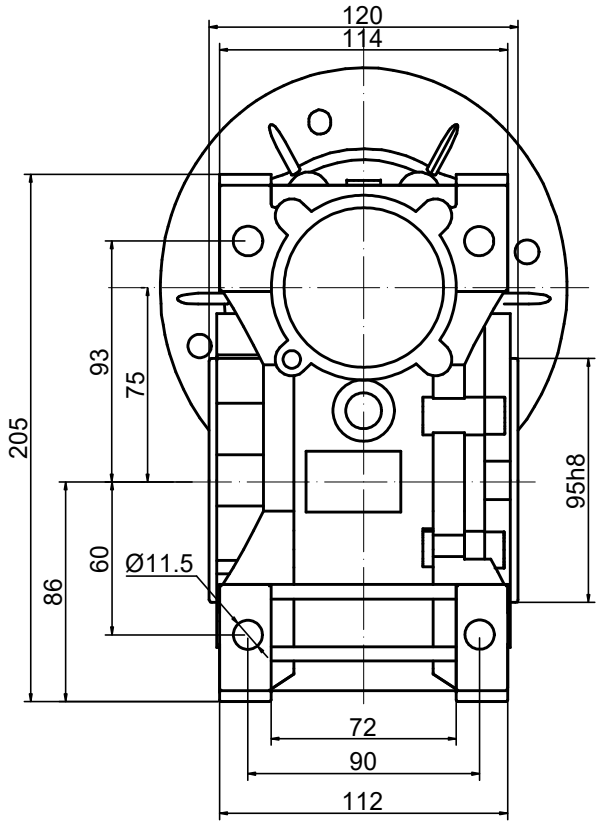

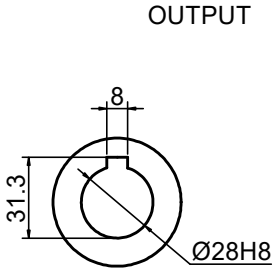

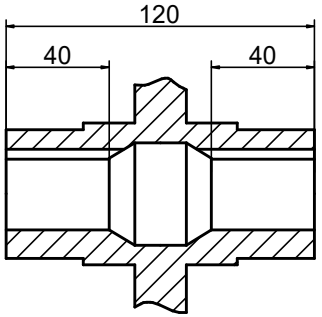

STEPPERONLINE®		APVD	LDJ	1.23.2024
		CHKD		
	1:2	DRN	HW	1.19.2024
	SCALE	SIGNATURE		DATE

WORM GEAR SPEED REDUCER

MRVR075LB3-G100-D28