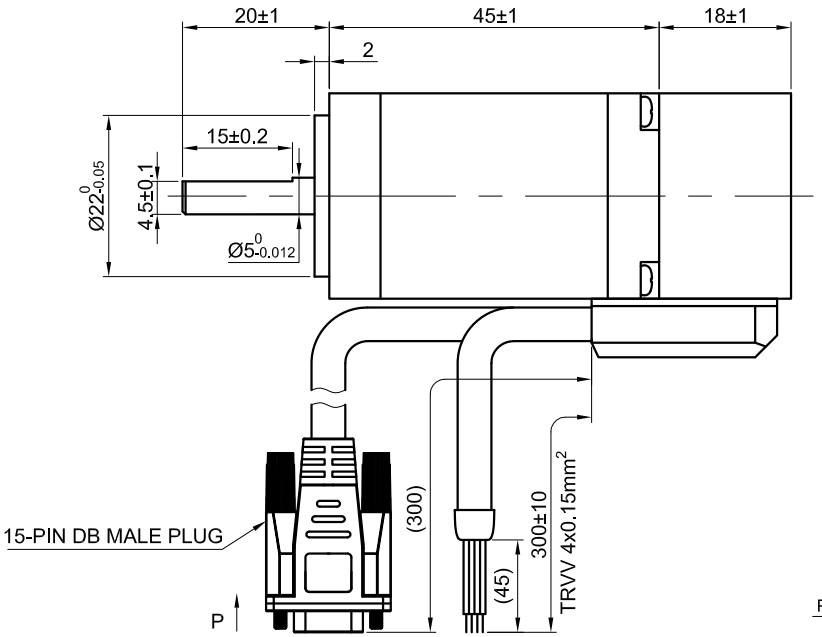

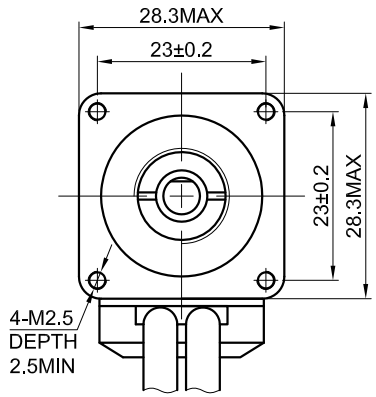

P VIEW

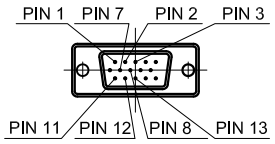

SPECIFICATION / CONNECTION	BIPOLAR
AMPS/PHASE	0.67
RESISTANCE/PHASE(Ohms)@20°C	6.80±10%
INDUCTANCE/PHASE(mH)@1KHz	6.00±20%
HOLDING TORQUE(Nm)[lb-in]	0.10 [0.89]
STEP ANGLE(°)	1.8
STEP ACCURACY(NON-ACCUM)	±5.00%
ROTOR INERTIA(g-cm²)	15
WEIGHT(Kg)[lb]	—

TEMPERATURE RISE:MAX.80°C（MOTOR STANDSTILL;FOR 2PHASE ENERGIZED）

OPERATION AMBIENT TEMPERATURE 0°C~50°C[32°F~122°F]

INSULATION RESISTANCE 100 Mohm（UNDER NORMAL TEMPERATURE AND HUMIDITY）

INSULATION CLASS B 130°C[266°F]

DIELECTRIC STRENGTH 500VAC FOR 1MIN.(BETWEEN THE MOTOR COILS AND THE MOTOR CASE)

TYPE OF CONNECTION (EXTERN)		MOTOR	
PIN NO	BIPOLAR	LEADS	WINDING
1	A —	GRN	A
2	A\ —	BLK	A\
3	B —	RED	B
4	B\ —	BLU	B\

FULL STEP 2 PHASE-Ex. ,
WHEN FACING MOUNTING END (X)

STEP	A	B	A\	B\		CCW
1	+	+	-	-	↓	↑
2	-	+	+	-		
3	-	-	+	+		
4	+	-	-	+	CW	

ENCODER RESOLUTION:1000PPR(4000CPR)

15-PIN DB MALE PLUG	1	2	3	7	8	11	12	13
LEAD COLOR	WHT	RED	BLK	GRN	BLU	ORG	GRY	YEL
DESCRIPTION	EA+	VCC	GND	EZ+	EZ-	EB+	EB-	EA-

STEPPERONLINE®

	APVD		3.24.2023
	CHKD		
1:1	DRN		
SCALE	SIGNATURE		DATE

STEPPER MOTOR

11HS18-0674D-E1000-C1