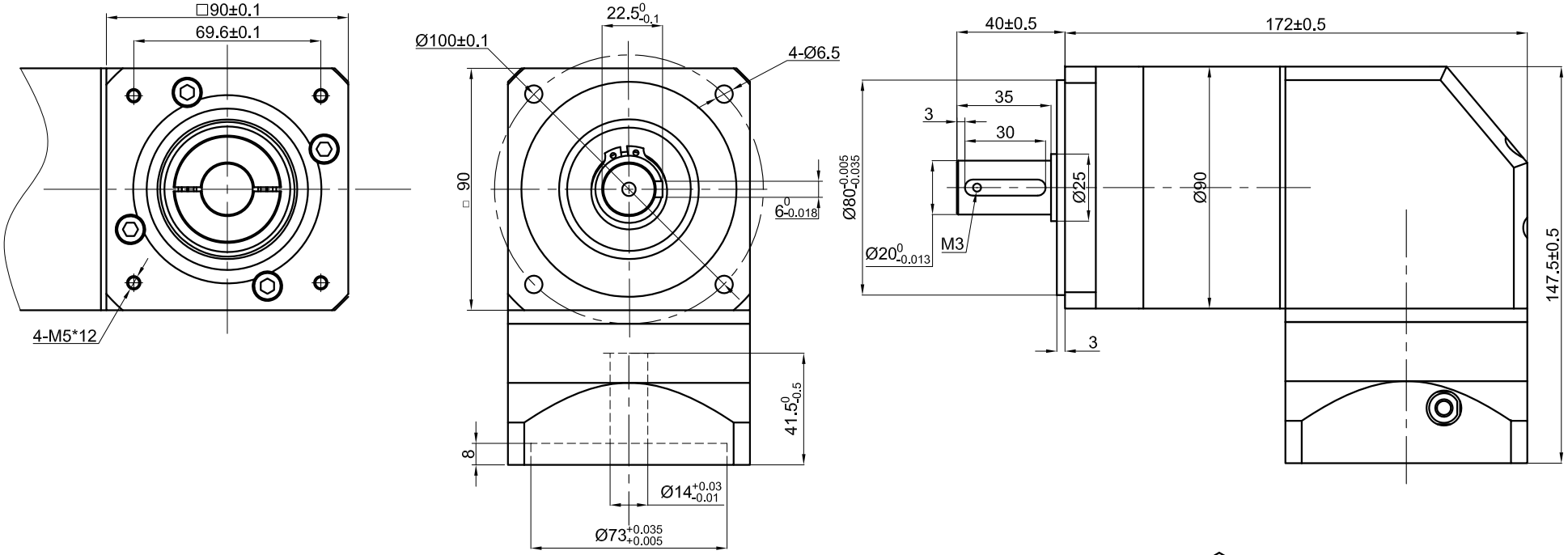

SPECIFICATION \ CONNECTION	VALUE
GEAR RATIO	20
EFFICIENCY	96.00%
BACKLASH@NO-LOAD(arcmin)	<=15
MAX.PERMISSIBLE TORQUE(Nm)[lb-in]	90.00[796.57]
MOMENT PERMISSIBLE TORQUE(Nm)[lb-in]	180.00[1593.13]
SHAFT MAXIMUM AXIAL LOAD(N)	800
SHAFT MAXIMUM RADIAL LOAD(N)	1000
GEARBOX MATCHING MOTOR'S INPUT SHAFT LENGTH (mm)	41±0.5
RATED INPUT SPEED(RPM)	3000
MAX. INPUT SPEED(RPM)	6000
NOISE(dB)	<=55
WATERPROOF RATING	IP54
LIFE(h)	20000
WORKING TEMPERATURE	-20°C~150°C[-4°F~302°F]

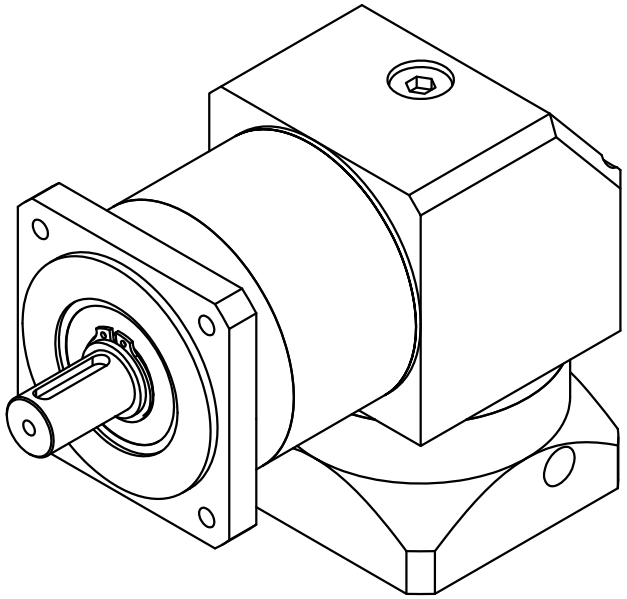

STEPPERONLINE®

	APVD		3.8.2023
	CHKD		
2:3	DRN		
SCALE	SIGNATURE		DATE

PLANETARY GEARBOX

RYG34-G20