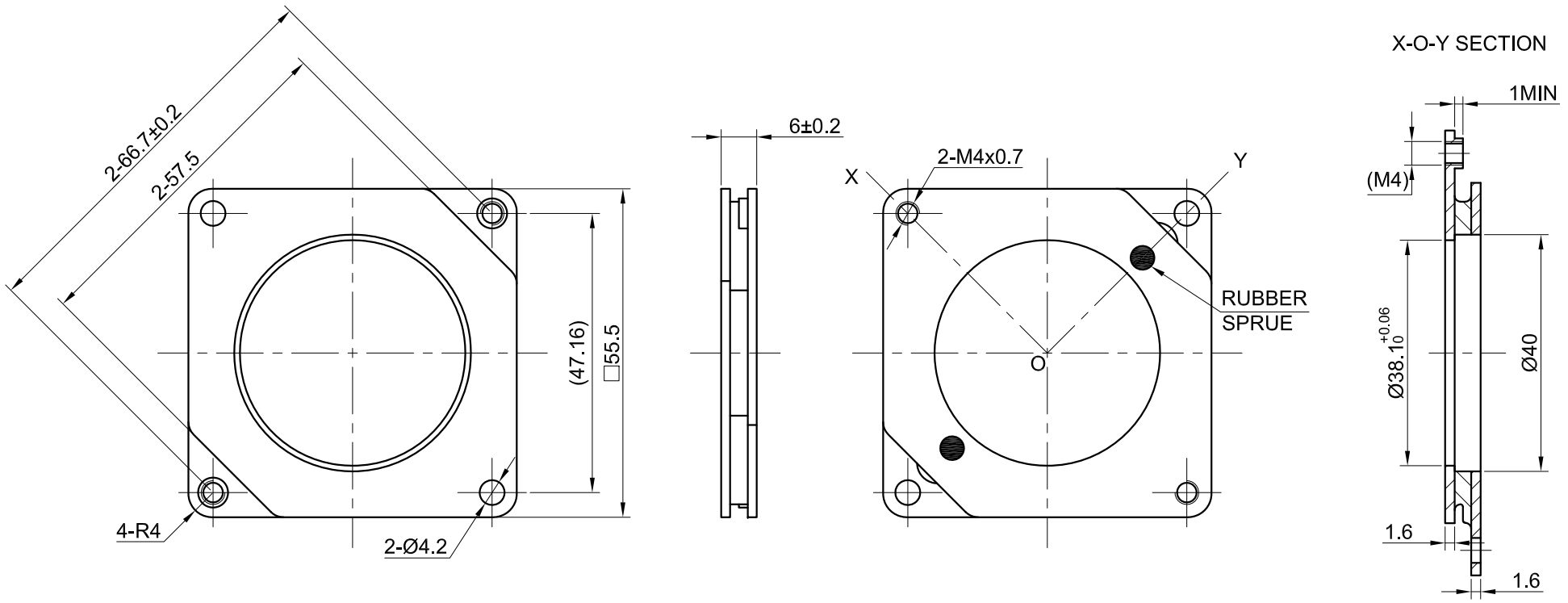

STEPPERONLINE®		APVD		3.31.2023
		CHKD		
	UNIT : mm	DRN		
	SCALE: 1:1	SIGNATURE		DATE

RUBBER VIBRATION DAMPER

ST-D2