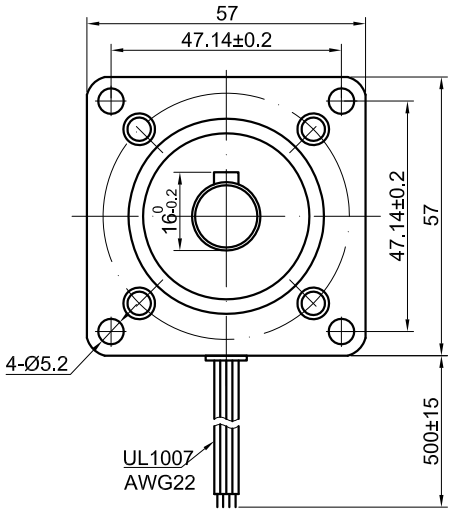

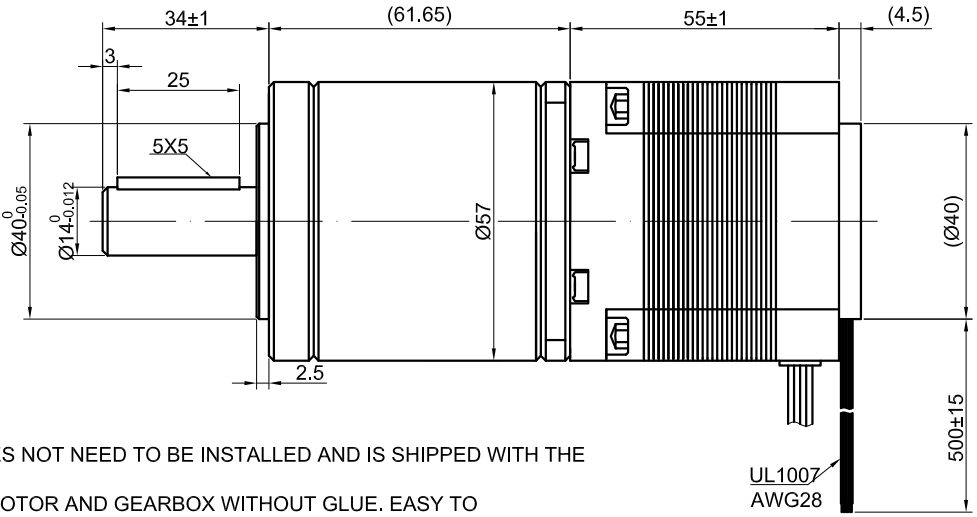

NOTE:
1. THE KEY DOES NOT NEED TO BE INSTALLED AND IS SHIPPED WITH THE MOTOR.
2. MOUNTING MOTOR AND GEARBOX WITHOUT GLUE. EASY TO DISASSEMBLE.

SPECIFICATION / CONNECTION	BIPOLAR
AMPS/PHASE	2.80
RESISTANCE/PHASE(Ohms)@25°C	0.90±10%
INDUCTANCE/PHASE(mH)@1KHz	2.80±20%
HOLDING TORQUE w/o GEARBOX (Nm)[lb-in]	1.02[9.03]
GEAR RATIO	50
EFFICIENCY	75.00%
STEP ANGLE w/o GEARBOX(°)	1.80
BACKLASH@NO-LOAD(°)	1.6
MAX.PERMISSIBLE TORQUE(Nm)	20.00
MOMENT PERMISSIBLE TORQUE(Nm)	40.00
WEIGHT(kg)	—
LIFE(h)	6000.00
AMBIENT TEMPERATURE(°C)	-10 ~ 50
INSULATION CLASS	B
MAX. AXIAL LOAD(N)	100
MAX. RADIAL LOAD(N)	250

TYPE OF CONNECTION (EXTERN)		MOTOR	
PIN NO	BIPOLAR	LEADS	WINDING
1	A —	BLK	A
2	A\ —	GRN	A\
3	B —	RED	B
4	B\ —	BLU	B\

FULL STEP 2 PHASE-Ex. ,
WHEN FACING MOUNTING END (X)

STEP	A	B	A\	B\		CCW
1	+	+	-	-	↓	↑
2	-	+	+	-		
3	-	-	+	+		
4	+	-	-	+	CW	

ENCODER CONNECTION:1000PPR(4000CPR)								
LEAD COLOR	RED	BLK	BRN	ORG	BLU	GRN	YEL	WHT
DESCRIPTION	+5V	EGND	EA+	EA-	EB+	EB-	EZ+	EZ-

STEPPERONLINE®

	APVD		3.1.2023
	CHKD		
1:1.5	DRN		
SCALE	SIGNATURE		DATE

STEPPER MOTOR

23HS22-2804-HG50-ME1K