REV.	REVISION RECORD	DATE
1	ADD CABLE	1.13.2023
2	(1)CHANGE WIRE COLOR (FORMERLY A PUR C YEL B GRN D BLU) (2)CHANGE WIRE GAUGE(FORMERLY AWG28)	3.15.2023

END COVER COLOR: BLACK

NUMBER OF WIRES: 2

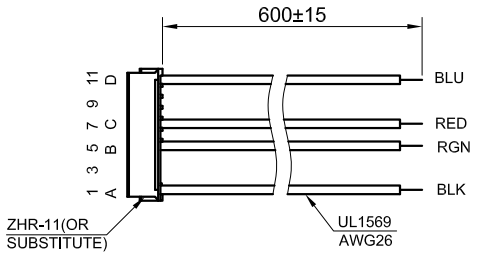

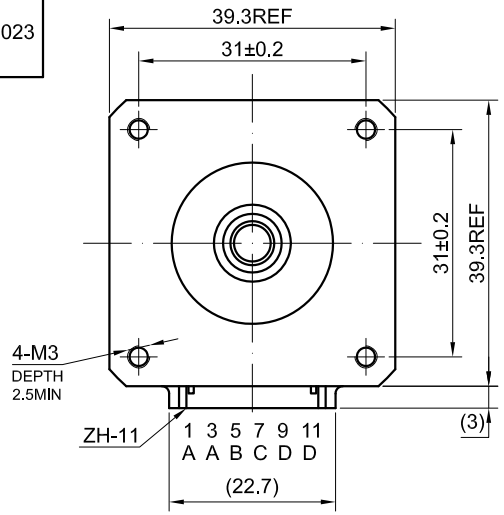

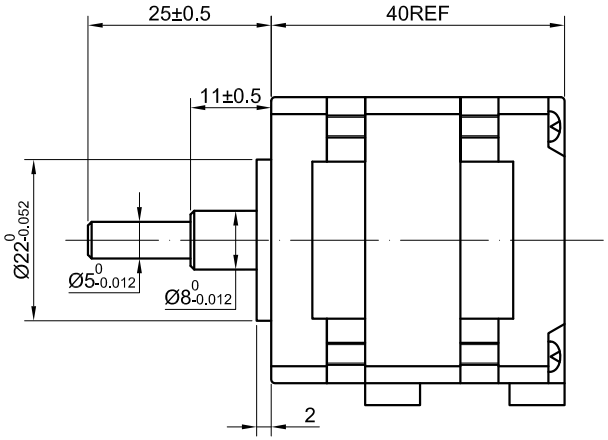

SPECIFICATION \ CONNECTION	HOLLOW SHAFT STEPPER MOTOR	SOLID SHAFT STEPPER MOTOR
AMPS/PHASE	0.30	0.30
RESISTANCE/PHASE(Ohms)@25°C	25.0±10%	25.0±10%
INDUCTANCE/PHASE(mH)@1KHz	22.0±20%	22.0±20%
HOLDING TORQUE(Nm)[lb-in]	0.08[0.708]	0.08[0.708]
STEP ANGLE(°)	1.80	1.80
STEP ACCURACY(NON-ACCUM)	±5.00%	±5.00%
ROTOR INERTIA(g-cm²)	13	13
WEIGHT(Kg)[lb]	——	——
TEMPERATURE RISE:MAX.80°C（MOTOR STANDSTILL;FOR 2PHASE ENERGIZED）		
AMBIENT TEMPERATURE -10°C~50°C[14°F~122°F]		
INSULATION RESISTANCE 100 Mohm（UNDER NORMAL TEMPERATURE AND HUMIDITY）		
INSULATION CLASS B 130°C[266°F]		
DIELECTRIC STRENGTH 500VAC FOR 1MIN.(BETWEEN THE MOTOR COILS AND THE MOTOR CASE)		
AMBIENT HUMIDITY MAX.85%(NO CONDENSATION)		

TYPE OF CONNECTION (EXTERN)		MOTOR	
PIN NO	BIPOLAR	LEADS	WINDING
1	A	BLK	A
3	A		
5	C	GRN	C
7	B	RED	B
9	D		D
11	D	BLU	

FULL STEP 2 PHASE-Ex. ,
WHEN FACING MOUNTING END (X)

STEP	A	B	C	D		
1	+	+	-	-	↓ CW	CCW ↑
2	-	+	+	-		
3	-	-	+	+		
4	+	-	-	+		

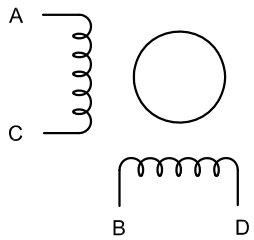

STEPPERONLINE®		APVD		3.15.2023
	REV. 2	CHKD		
	1.5:1	DRN		
	SCALE	SIGNATURE		DATE

STEPPER MOTOR

16HS16-0304S-C1