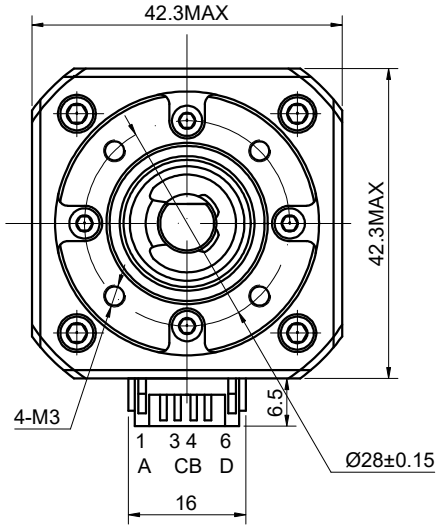

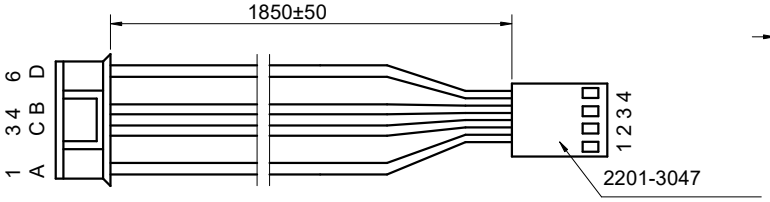

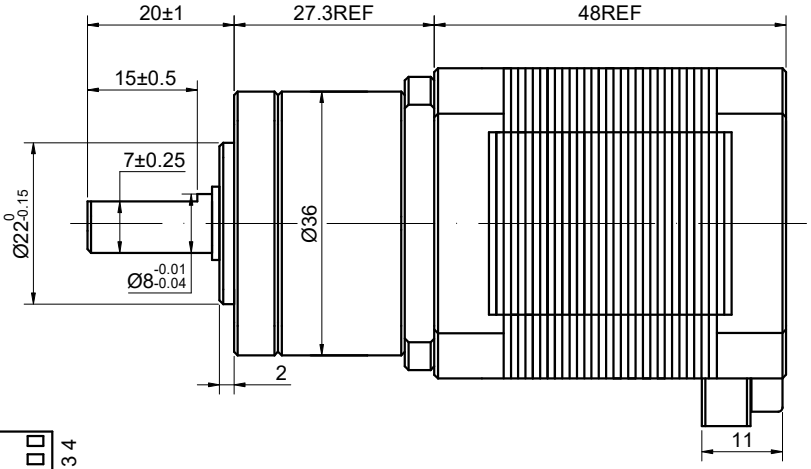

SPECIFICATION / CONNECTION	BIPOLAR
AMPS/PHASE	1.68
RESISTANCE/PHASE(Ohms)@25°C	1.80±10%
INDUCTANCE/PHASE(mH)@1KHz	3.20±20%
HOLDING TORQUE w/o GEARBOX(Nm)[lb-in]	0.52[4.60]
GEAR RATIO	$5\frac{2}{11}$
EFFICIENCY	90.00%
STEP ANGLE w/o GEARBOX(°)	1.80
BACKLASH@NO-LOAD	<=1°
MAX.PERMISSIBLE TORQUE(Nm)	2.00
MOMENT PERMISSIBLE TORQUE(Nm)	4.00
SHAFT MAXIMUM AXIAL LOAD(N)	50.00
SHAFT MAXIMUM RADIAL LOAD(N)	100.00
WEIGHT(Kg)[lb]	——
TEMPERATURE RISE:MAX.80°C（MOTOR STANDSTILL;FOR 2PHASE ENERGIZED）	
AMBIENT TEMPERATURE -10°C~50°C[14°F~122°F]	
INSULATION CLASS B 130°C[266°F]	

TYPE OF CONNECTION (EXTERN)		MOTOR	
PIN NO	BIPOLAR	LEADS	WINDING
1	A+ —	BLK	A+
2	A- —	GRN	A-
3	B+ —	BLU	B+
4	B- —	RED	B-

FULL STEP 2 PHASE-Ex. ,
WHEN FACING MOUNTING END (X)

STEP	A+	B+	A-	B-		CCW
1	+	+	-	-	↓	↑
2	-	+	+	-		
3	-	-	+	+		
4	+	-	-	+	CW	

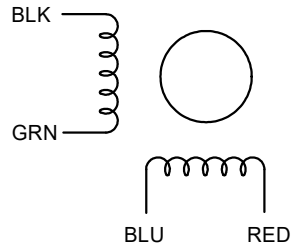

STEPPERONLINE®

	APVD		1.17.2024
	CHKD		
1:1	DRN		
SCALE	SIGNATURE		DATE

STEPPER MOTOR

17HS19-1684S-PG5X