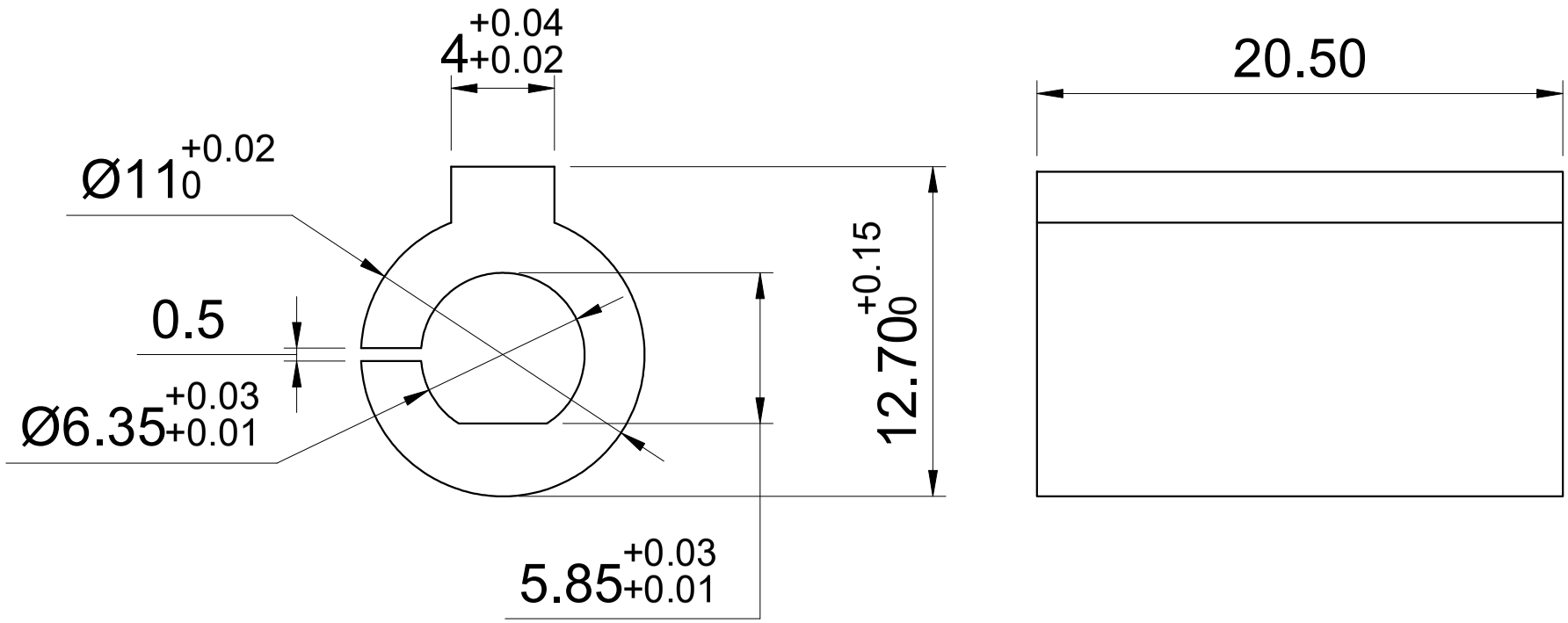

STEPPERONLINE®		APVD	LDJ	12.28.2023	SHAFT SLEEVE
		CHKD			
	4:1	DRN	YSX	12.28.2023	RV30-K11-D6.35
	SCALE	SIGNATURE		DATE	