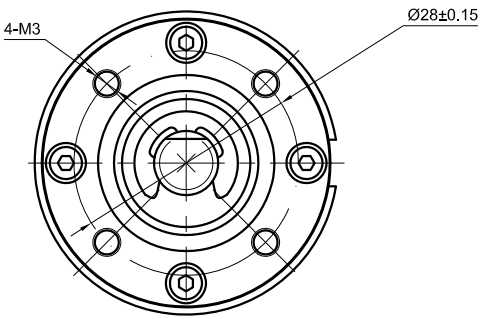

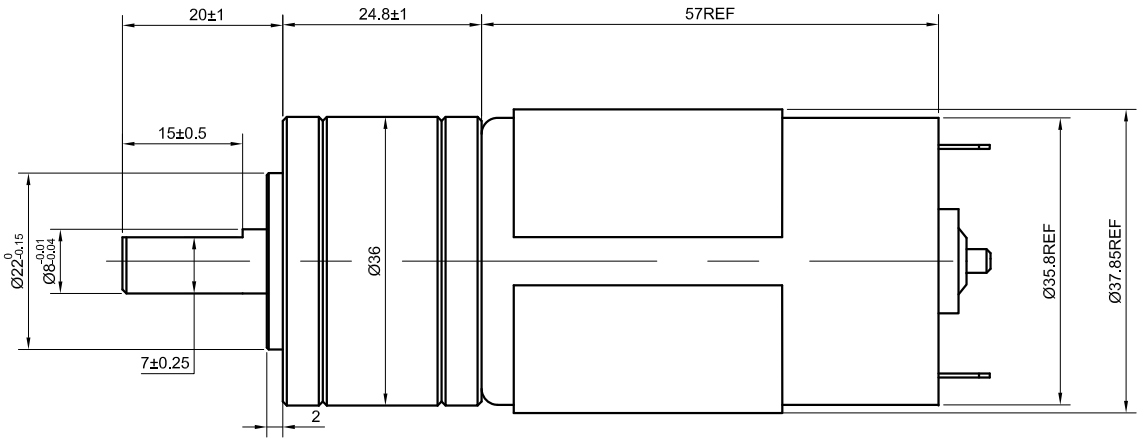

SPECIFICATION / CONNECTION	VALUE
RATED VOLTAGE(V):	24
NO LOAD CURRENT(mA):	100
NO LOAD SPEED w/ GEARBOX(RPM):	865
RATED LOAD TORQUE w/ GEARBOX(kg.cm):	1.0
RATED CURRENT(mA):	600
RATED LOAD SPEED w/ GEARBOX(RPM):	634
RATED POWER(W)	7.2
NO LOAD SPEED w/o GEARBOX(RPM):	4500
RATED LOAD TORQUE w/o GEARBOX(g.cm):	220
RATED LOAD SPEED w/o GEARBOX(RPM):	3300
RATIO	5.2
MAX. PERMISSIBLE RORQUE(kg.cm)	30
MAX. PERMISSIBLE AXIAL LOAD(N)	≤30
MAX. PERMISSIBLE RADIAL LOAD(N)	≤50(6mm FROM THE MOUNTING SURFACE)

NOTES:

1.PLEASE CONDUCT THE WELDING WORK IN A SHORT TIME.(RECOMMENDATION:WITH THE SOLDERING IRON TIP AT A TEMPERATURE OF 340～400℃，WITHIN 2 SECONDS.

2.PREVENT GEAR MOTOR FROM BEING SHOCKED OR DROPPING IN MOUNTING PROCESS.IT IS PROHIBITED TO STRIKE AND CRUSH DIRECTLY ON REDUCER OUTPUT SHAFT.

3.INSTALL THE SCREWS AFTER FIRST CHECKING THE TAPS AND TAP DEPTH AGAINST THE DIMENSIONS ENTERED ON THE EXTERIOR DRAWING.

4.IT IS NECESSARY TO BE CAREFUL THAT THE ADHESIVE DOES NOT SPREAD ALONG THE SHAFT AND FLOW INTO THE BEARING.

5.DO NOT TURN A GEARED MOTOR BY ITS OUTPUT SHAFT WHEN,FOR EXAMPLE,ARRANGING ITS POSITION SO AS TO INSTALL IT.

STEPPERONLINE®

	APVD		10.20.2022
	CHKD		
1:1	DRN		
SCALE	SIGNATURE		DATE

DC GEARBOX MOTOR

PA36-38244500-G5