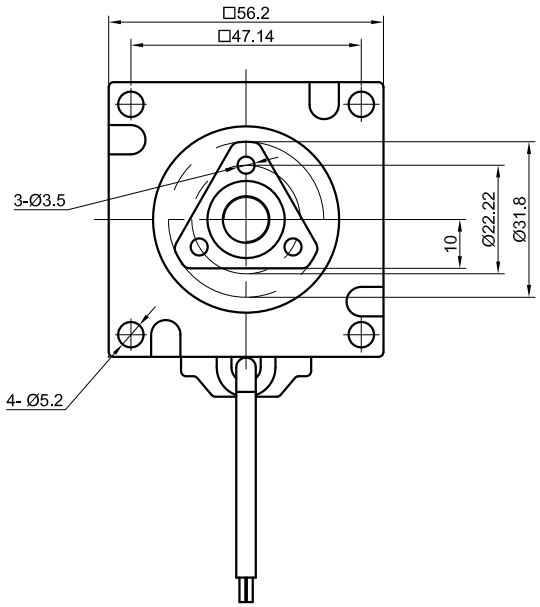

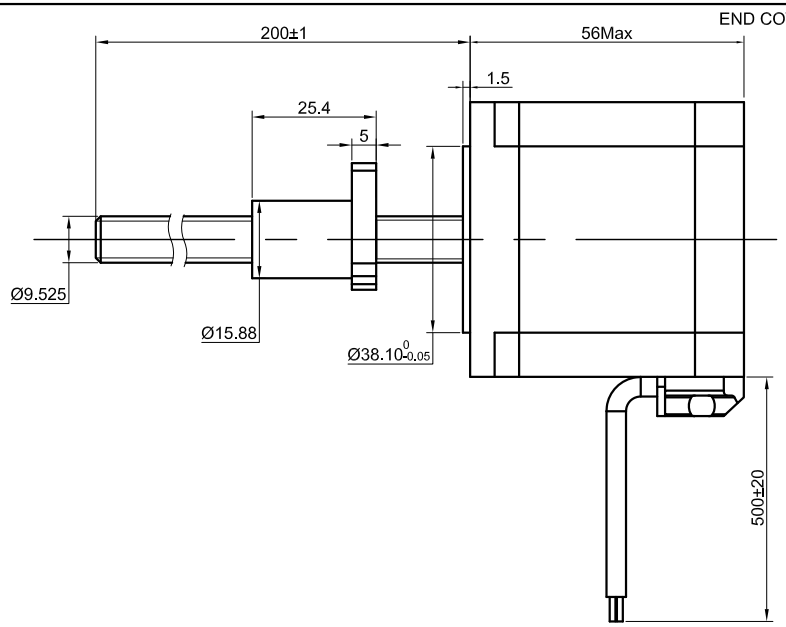

SPECIFICATION / CONNECTION	BIPOLAR
AMPS/PHASE	3
RESISTANCE/PHASE(Ohms)@25°C	1.1±10%
INDUCTANCE/PHASE(mH)@1KHz	4.5±20%
HOLDING TORQUE(Nm)[lb-in]	1[8.85]
LEAD(mm)	10.16
LINEAR TRAVEL/STEP(mm)	0.0508
STEP ANGLE(°)	1.80
STEP ACCURACY(NON-ACCUM)	±5.00%
WEIGHT(Kg)[lb]	——

TEMPERATURE RISE:MAX.80°C（MOTOR STANDSTILL;FOR 2PHASE ENERGIZED）

AMBIENT TEMPERATURE -10°C~50°C[14°F~122°F]

INSULATION RESISTANCE 100 Mohm（UNDER NORMAL TEMPERATURE AND HUMIDITY）

INSULATION CLASS B 130°C[266°F]

DIELECTRIC STRENGTH 500VAC FOR 1MIN.(BETWEEN THE MOTOR COILS AND THE MOTOR CASE)

AMBIENT HUMIDITY MAX.85%(NO CONDENSATION)

TYPE OF CONNECTION (EXTERN)		MOTOR	
PIN NO	BIPOLAR	LEADS	WINDING
1	A —	RED	A
2	A\ —	RED/WHT	A\
3	B —	GRN	B
4	B\ —	GRN/WHT	B\

FULL STEP 2 PHASE-Ex. ,
WHEN FACING MOUNTING END (X)

STEP	A	B	A\	B\		CCW
1	+	+	-	-	↓	↑
2	-	+	+	-		
3	-	-	+	+		
4	+	-	-	+	CW	

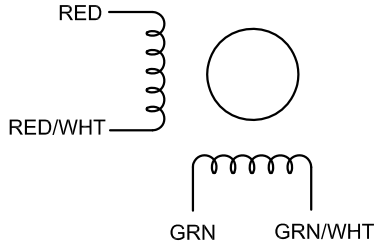

STEPPERONLINE®		APVD		8.26.2022
		CHKD		
	3:2	DRN		
	SCALE	SIGNATURE		DATE

STEPPER MOTOR

23E22S3004NG5-200RS