MODEL NO.	17ME15-1504S	DWG NO.	A0944

CUSTOMER'S MODEL: NO MODEL
END COVER COLOR: BLACK

REV.	REVISION RECORD	BY	DATE
0	ORIGIN	DJL	5.25.2023

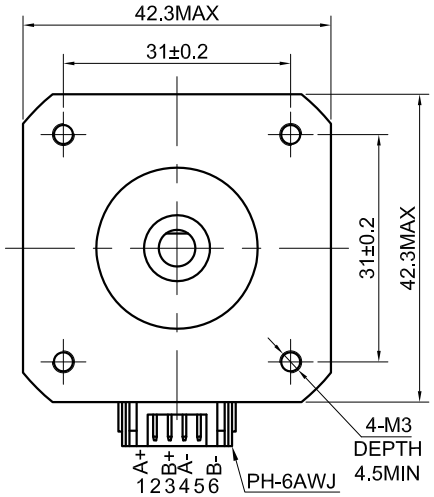

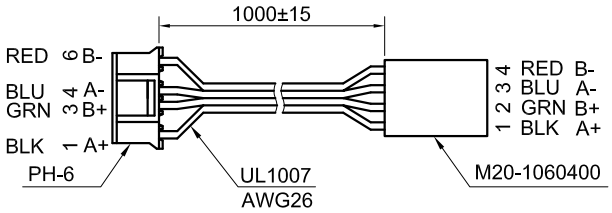

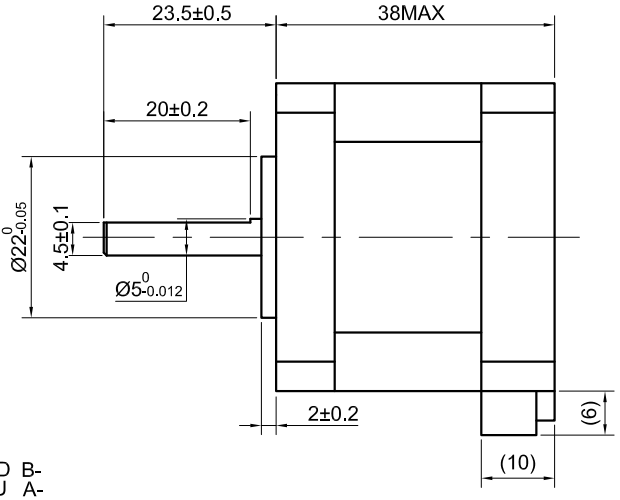

SPECIFICATION \ CONNECTION	BIPOLAR
AMPS/PHASE	1.50
RESISTANCE/PHASE(Ohms)@25°C	2.00±10%
INDUCTANCE/PHASE(mH)@1KHz	5.20±20%
HOLDING TORQUE(Nm)[lb-in]	0.30[2.66]
STEP ANGLE(°)	0.90
STEP ACCURACY(NON-ACCUM)	±5.00%
ROTOR INERTIA(g-cm²)	——
WEIGHT(Kg)[lb]	——
AMBIENT TEMPERATURE	-10°C~50°C[14°F~122°F]
INSULATION CLASS	B 130°C[266°F]
TEMPERATURE RISE	MAX.80°C

COMMENT:
1.DYNAMIC AXIAL LOAD: 10N MAX
2.DYNAMIC RADIAL LOAD @ SHAFT LENGTH 20mm: 21N MAX
3.TMBF 6000h OR MORE @ 24V/300RPM
4.INSULATION RESISTANCE
(NORMAL TEMPERATURE AND HUMIDITY): 100 Mohm
5.DIELECTRIC STRENGTH 500VAC FOR 1MIN.(BETWEEN THE MOTOR COILS AND THE MOTOR CASE)

MOTOR CONNECTION

PIN NO	BIPOLAR	LEADS	WINDING
1	A+	BLK	A+
2	A -	BLU	A-
3	B+	GRN	
4	B -	RED	B+ B-

FULL STEP 2 PHASE-Ex.,WHEN FACING MOUNTING END (X)

STEP	A+	B+	A-	B-
1	+	+	-	-
2	-	+	+	-
3	-	-	+	+
4	+	-	-	+

↓ CW ↑ CCW

DIMENSIONS ARE IN MILLIMETERS.
TOLERANCES AS BELOW:

DECIMALS		ANGLES
X	±0.5	±2°
X.X	±0.25	
X.XX	±0.13	

THIRD ANGLE PROJECTION

THIS DOCUMENT SHALL NOT BE REPRODUCED NOR SHALL THE INFORMATION CONTAINED HEREIN BE USED BY OR DISCLOSED TO OTHERS UNLESS EXPRESSLY AUTHORIZED IN BY WRITING STEPPERONLINE.

SIGNATURE		DATE
DRN	DJL	5.25.2023
APVD		

STEPPERONLINE®

STEPPER MOTOR

17ME15-1504S

REV.	0	SCALE	1:1	DWG NO.	A0944