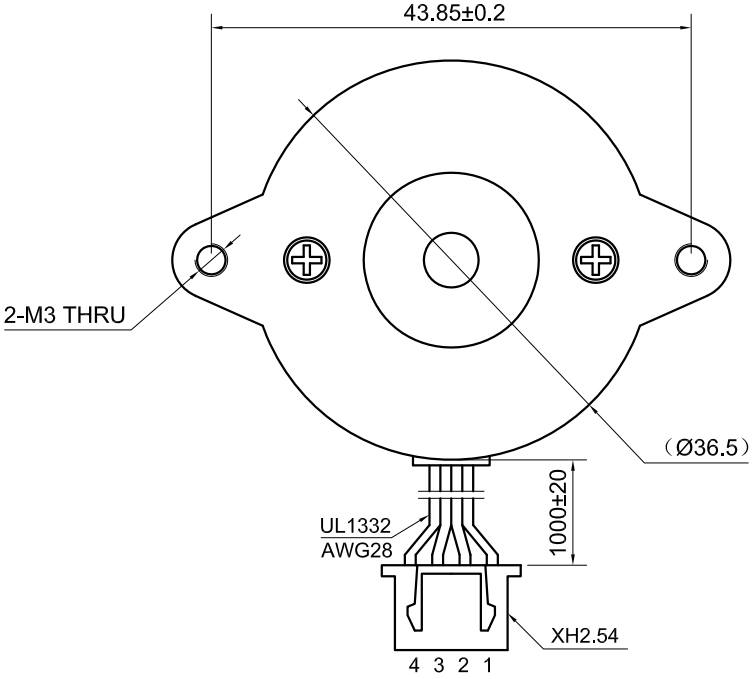

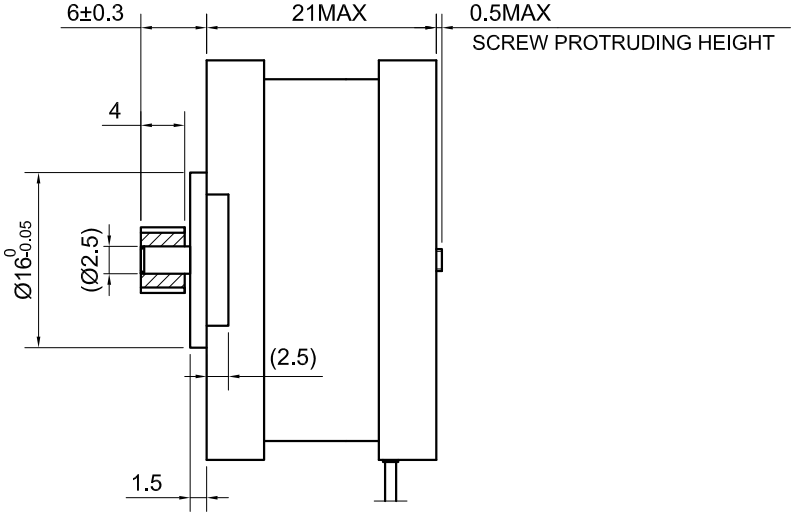

END COVER COLOR: BLACK

SPECIFICATION / CONNECTION	BIPOLAR
AMPS/PHASE	1.00
RESISTANCE/PHASE(Ohms)@25°C	2.10±10%
INDUCTANCE/PHASE(mH)@1KHz	1.10±20%
HOLDING TORQUE(Nm)[lb-in]	0.10[0.88]
STEP ANGLE(°)	1.80
STEP ACCURACY(NON-ACCUM)	±5.00%
ROTOR INERTIA(g-cm²)	16
WEIGHT(Kg)[lb]	——
TEMPERATURE RISE:MAX.125°C（MOTOR STANDSTILL;FOR 2PHASE ENERGIZED）	
AMBIENT TEMPERATURE -10°C~50°C[14°F~122°F]	
INSULATION RESISTANCE 100 Mohm（UNDER NORMAL TEMPERATURE AND HUMIDITY）	
INSULATION CLASS H 180°C[356°F]	
DIELECTRIC STRENGTH 500VAC FOR 1MIN.(BETWEEN THE MOTOR COILS AND THE MOTOR CASE)	

TYPE OF CONNECTION (EXTERN)		MOTOR	
PIN NO	BIPOLAR	LEADS	WINDING
1	A+ —	RED	A+
2	A- —	GRN	A-
3	B+ —	BLK	B+
4	B- —	BLU	B-

PULLEY SPECIFICATIONS		
MODULE	m	0.5
NUMBER OF TEETH	Z	10
PITCH DIAMETER	d	Ø5
OUTSIDE DIAMETER	da	Ø6
PRESSURE ANGLE	α	20°
MATERIAL		SUS304

FULL STEP 2 PHASE-Ex. ,
WHEN FACING MOUNTING END (X)

STEP	A+	B+	A-	B-		
1	+	+	-	-	↓	CCW ↑
2	-	+	+	-		
3	-	-	+	+		
4	+	-	-	+	CW	

STEPPERONLINE®		APVD		3.7.2023
		CHKD		
	1.5:1	DRN		
	SCALE	SIGNATURE		DATE

STEPPER MOTOR

14RE08-1004S-H