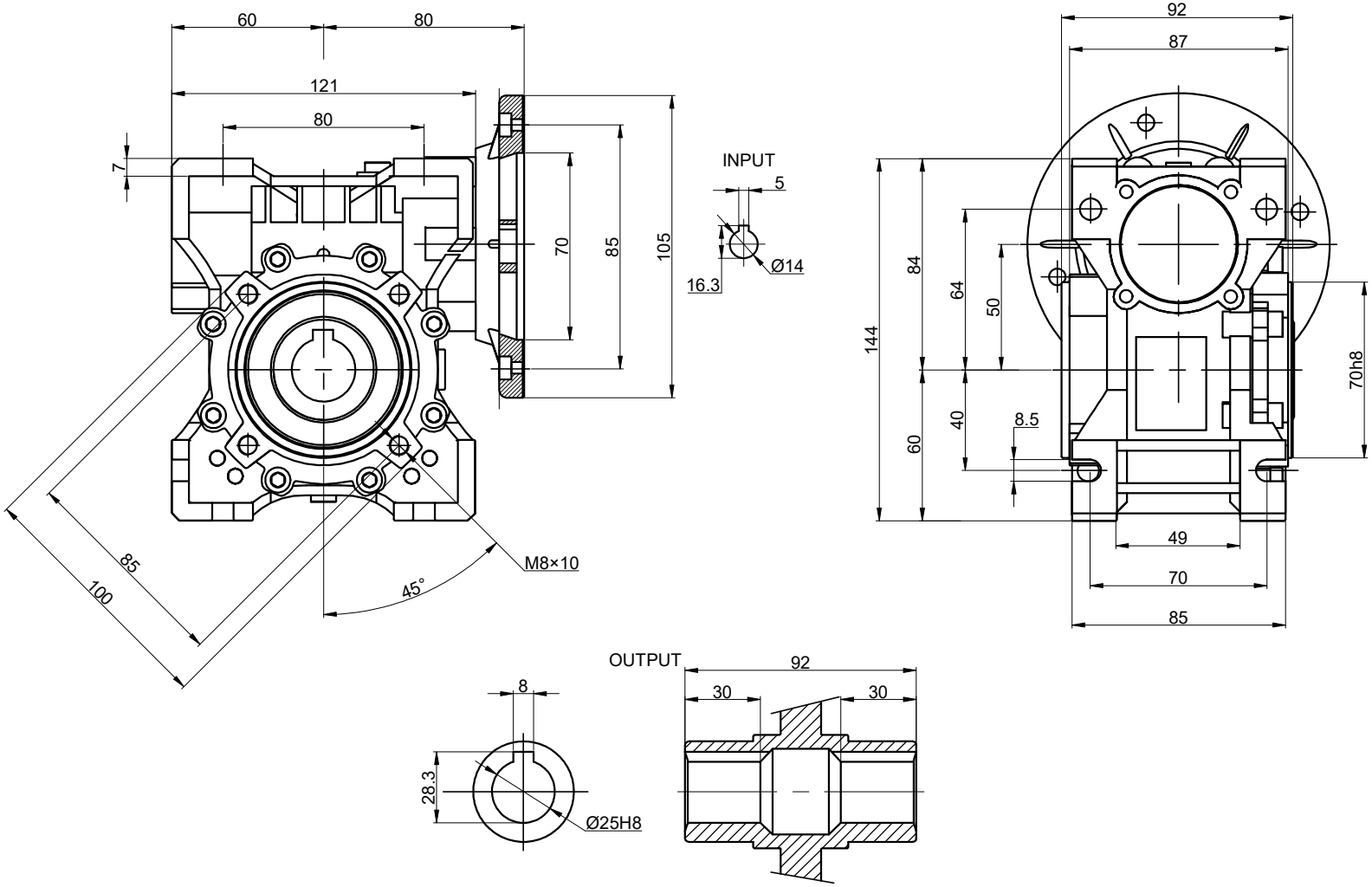

STEPPERONLINE®		APVD	HW	1.23.2024	WORM GEAR SPEED REDUCER
		CHKD			
	2:5	DRN	LDJ	1.19.2024	MRVR050FB3-G60-D14
	SCALE	SIGNATURE		DATE	