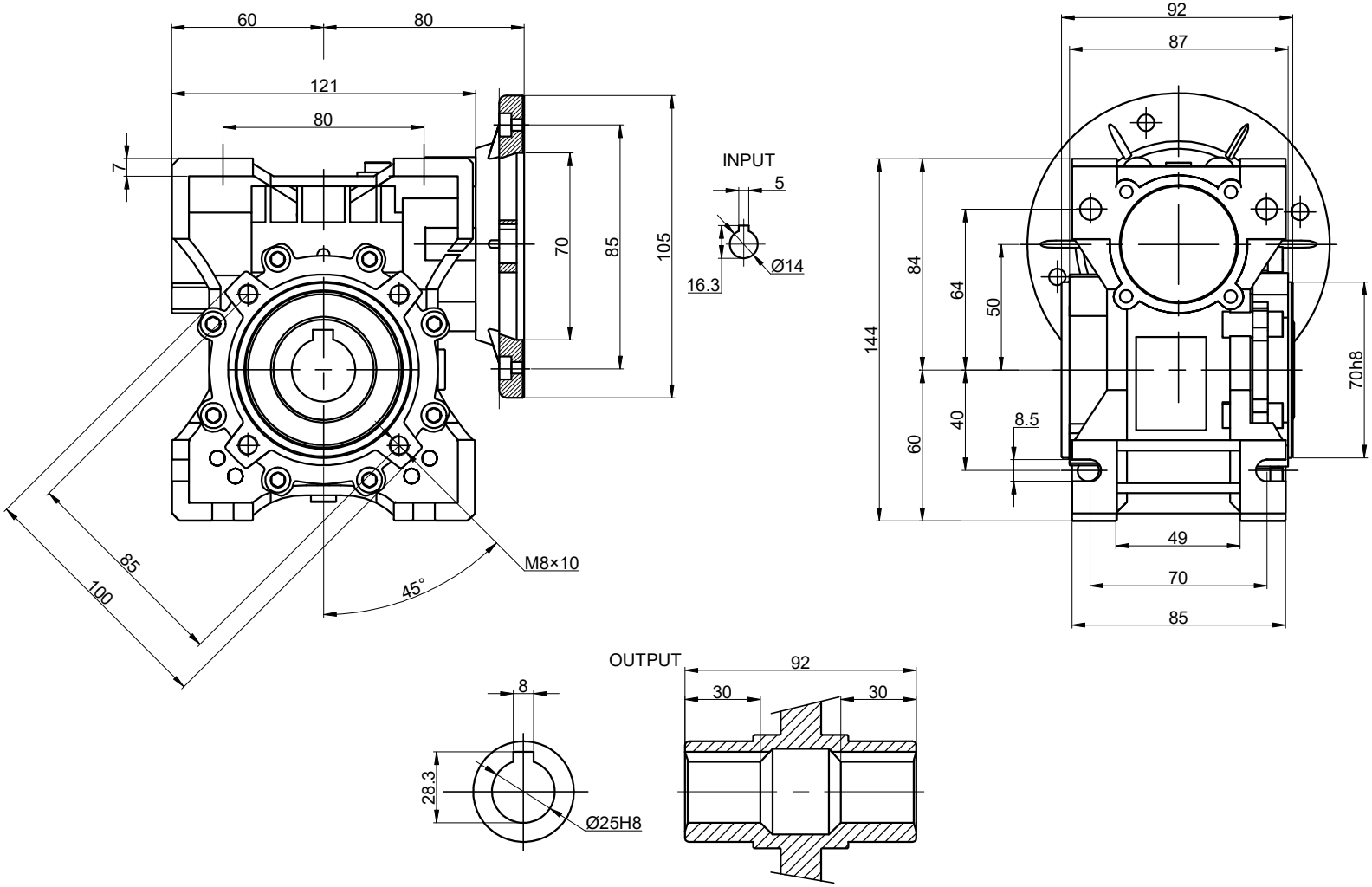

STEPPERONLINE®		APVD	HW	1.23.2024
		CHKD		
	2:5	DRN	LDJ	1.19.2024
	SCALE	SIGNATURE		DATE

WORM GEAR SPEED REDUCER

MRVR050FB3-G10-D14