750W Power Supply with Single Output

RSP-750 series

User's Manual

Dimension

L	*	W	*	H		
250	*	127	*	41	(1U)	mm
9.84	*	5	*	1.61	(1U)	inch

R33100 RoHS CNS14336-1 | UL62368-1 | BS EN/EN62368-1 | GB4943.1 | TPTC004 | IEC62368-1

Industrial | Automate | Telecom | Network | EV

Features

- Universal AC input / Full range
- Built-in active PFC function
- High efficiency up to 92%
- Forced air cooling by built-in DC fan
- Output voltage and constant current level programmable
- Built-in remote ON-OFF control / remote sense / auxiliary power / DC OK signal
- Protections: Short circuit / Overload / Over voltage / Over temperature
- Optional conformal coating
- 5 years warranty

Applications

- Factory control or automation apparatus
- Test and measurement instrument
- Laser related machine
- Burn-in facility
- RF application

Description

RSP-750 is a 750W single output enclosed type AC/DC power supply. This series operates for 90~264VAC input voltage and offers the models with the DC output mostly demanded from the industry. Each model is cooled by the built-in fan with fan speed control, working for the temperature up to 70℃. Moreover, RSP-750 provides vast design flexibility by equipping various built-in functions such as the output programming, remote ON-OFF control, auxiliary power, etc.

Model Encoding / Order Information

RSP - 750 - 48

- 48 → Output voltage (5V/12V/15V/24V/27V/48V)
- 750 → Output wattage
- RSP → Series name

STEPPERONLINE®

SPECIFICATION

MODEL		RSP-750-5	RSP-750-12	RSP-750-15	RSP-750-24	RSP-750-27	RSP-750-48
OUTPUT	DC VOLTAGE	5V	12V	15V	24V	27V	48V
	RATED CURRENT	100A	62.5A	50A	31.3A	27.8A	15.7A
	CURRENT RANGE	0 ~ 100A	0 ~ 62.5A	0 ~ 50A	0 ~ 31.3A	0 ~ 27.8A	0 ~ 15.7A
	RATED POWER	500W	750W	750W	751.2W	750.6W	753.6W
	RIPPLE & NOISE (max.) Note.2	150mVp-p	150mVp-p	150mVp-p	150mVp-p	150mVp-p	150mVp-p
	VOLTAGE ADJ. RANGE	4.75 ~ 5.5V	10 ~ 13.5V	13.5 ~ 16.5V	20 ~ 26.4V	24 ~ 30V	43 ~ 55V
	VOLTAGE TOLERANCE Note.3	±2.0%	±1.0%	±1.0%	±1.0%	±1.0%	±1.0%
	LINE REGULATION	±0.5%	±0.5%	±0.5%	±0.5%	±0.5%	±0.5%
	LOAD REGULATION	±2.0%	±0.5%	±0.5%	±0.5%	±0.5%	±0.5%
	SETUP, RISE TIME	1000ms, 50ms at full load					
	HOLD UP TIME (Typ.)	16ms/230VAC 16ms/115VAC at full load					
INPUT	VOLTAGE RANGE Note.4	90 ~ 264VAC 127 ~ 370VDC					
	FREQUENCY RANGE	47 ~ 63Hz					
	POWER FACTOR (Typ.)	0.97/230VAC 0.98/115VAC at full load					
	EFFICIENCY (Typ.)	82%	87%	89%	90.5%	90.5%	92%
	AC CURRENT (Typ.)	5V : 5.6A/115VAC 2.8A/230VAC 12V~48V : 8.2A/115VAC 3.9A/230VAC					
	INRUSH CURRENT (Typ.)	25A/115VAC 40A/230VAC					
	LEAKAGE CURRENT	<2.0mA / 240VAC					
PROTECTION	OVERLOAD	105 ~ 125% rated output power					
		Protection type : Constant current limiting, recovers automatically after fault condition is removed					
	OVER VOLTAGE (OVP)	5.75 ~ 6.75V	13.8 ~ 16.8V	17 ~ 20.5V	27.6 ~ 32.4V	31 ~ 36.5V	56.6 ~ 66.2V
		Protection type : Shut down o/p voltage, re-power on to recover					
	OVER TEMPERATURE	Shut down o/p voltage, recovers automatically after temperature goes down					
FUNCTION	OUTPUT VOLTAGE PROGRAMMABLE(PV)	Adjustment of output voltage is allowable to 40 ~ 110% of nominal output voltage. Please refer to the Function Manual.					
	CONSTANT CURRENT LEVEL PROGRAMMABLE(PC)	Adjustment of constant current level is allowable to 40 ~ 110% of rated current. Please refer to the Function Manual.					
	AUXILIARY POWER	12V @ 0.1A ; tolerance : ±10%					
	REMOTE ON-OFF CONTROL	Power on : short between *Remote ON-OFF(pin13)* & *12V-AUX(pin14)* on CN50 Power off : open between *Remote ON-OFF(pin13)* & *12-AUX(pin14)* on CN50					
	DC OK SIGNAL	The TTL signal out, power supply turn on = 0 ~ 1V ; power supply turn off = 3.3 ~ 5.6V					
ENVIRONMENT	WORKING TEMP.	-30 ~ +70℃ (Refer to "Derating Curve")					
	WORKING HUMIDITY	20 ~ 90% RH non-condensing					
	STORAGE TEMP., HUMIDITY	-40 ~ +85℃, 10 ~ 95% RH non-condensing					
	TEMP. COEFFICIENT	±0.03%/℃ (0 ~ 50℃)					
	VIBRATION	10 ~ 500Hz, 2G 10min./1cycle, 60min. each along X, Y, Z axes					
SAFETY & EMC (Note 7)	SAFETY STANDARDS	UL62368-1, CSA C22.2 No. 62368-1, TUV BS EN/EN62368-1, CCC GB4943.1, BSMI CNS14336-1, AS/NZS62368.1, EAC TP TC 004 approved					
	WITHSTAND VOLTAGE	I/P-O/P:3KVAC I/P-FG:2KVAC O/P-FG:0.5KVAC					
	ISOLATION RESISTANCE	I/P-O/P, I/P-FG, O/P-FG:100M Ohms / 500VDC / 25℃/ 70% RH					
	EMC EMISSION	**Parameter**	**Standard**	**Test Level / Note**			
		Conducted	BS EN/EN55032 (CISPR32)	Class B			
		Radiated	BS EN/EN55032 (CISPR32)	Class B			
		Harmonic Current	BS EN/EN61000-3-2	-----			
		Voltage Flicker	BS EN/EN61000-3-3	-----			
	EMC IMMUNITY	BS EN/EN55024, BS EN/EN61000-6-2, CCC GB17625.1,GB/T9254, BSMI CNS13438					
		Parameter	**Standard**	**Test Level / Note**			
		ESD	BS EN/EN61000-4-2	Level 3, 8KV air ; Level 2, 4KV contact			
		Radiated	BS EN/EN61000-4-3	Level 3			
		EFT / Burst	BS EN/EN61000-4-4	Level 3			
		Surge	BS EN/EN61000-4-5	Level 4, 4KV/Line-Earth ; Level 3, 2KV/Line-Line			
		Conducted	BS EN/EN61000-4-6	Level 3			
		Magnetic Field	BS EN/EN61000-4-8	Level 4			
		Voltage Dips and Interruptions	BS EN/EN61000-4-11	>95% dip 0.5 periods, 30% dip 25 periods, >95% interruptions 250 periods			
OTHERS	MTBF	336.9K hrs min. Telcordia SR-332 (Bellcore) ; 109.1K hrs min. MIL-HDBK-217F (25℃)					
	DIMENSION	250*127*41mm (L*W*H)					
	PACKING	1.64Kg; 6pcs/10.8Kg/1.1CUFT					

NOTE

1. All parameters NOT specially mentioned are measured at 230VAC input, rated load and 25℃ of ambient temperature.
2. Ripple & noise are measured at 20MHz of bandwidth by using a 12" twisted pair-wire terminated with a 0.1uf & 47uf parallel capacitor.
3. Tolerance : includes set up tolerance, line regulation and load regulation.
4. Derating may be needed under low input voltages. Please check the derating curve for more details.
5. There is high possibility to trigger the floating over voltage protection when PV voltage is trimmed from a high voltage level to a lower voltage level at light load or no load condition. It is suggested that turn off the power supply and set PV voltage to the lowest level, then adjust output voltage to a desired value.
6. Strongly recommended that external output capacitance should not exceed 5000uF. (Only for: RSP-750-5)
7. The power supply is considered a component which will be installed into a final equipment. All the EMC tests are been executed by mounting the unit on a 720mm*360mm metal plate with 1mm of thickness. The final equipment must be re-confirmed that it still meets EMC directives. For guidance on how to perform these EMC tests, please refer to "EMI testing of component power supplies." (as available on http://www.meanwell.com)
8. The ambient temperature derating of 3.5℃/1000m with fanless models and of 5℃/1000m with fan models for operating altitude higher than 2000m(6500ft).

※ Product Liability Disclaimer : For detailed information, please refer to https://www.meanwell.com/serviceDisclaimer.aspx

STEPPEDLINE®

Block Diagram

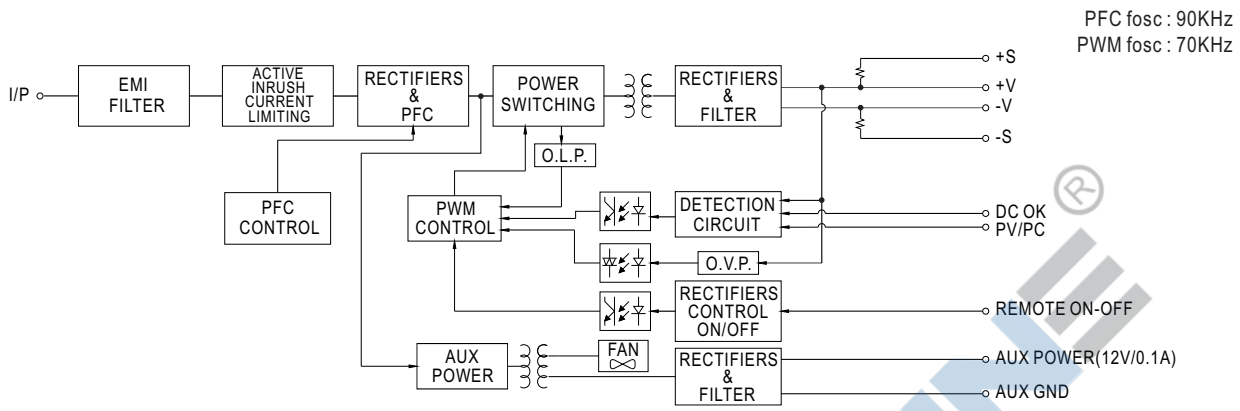

Static Characteristics

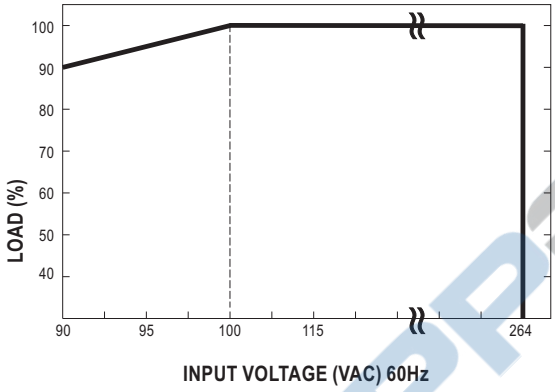

INPUT \ MODEL	5V	12V	15V
100~264VAC	500W 100A	750W 62.5A	750W 50A
90VAC	450W 90A	675W 56.25A	675W 45A
INPUT \ MODEL	**24V**	**27V**	**48V**
100~264VAC	751.2W 31.3A	750.6W 27.8A	753.6W 15.7A
90VAC	676.08W 28.17A	675.54W 25.02A	678.24W 14.13A

Derating Curve

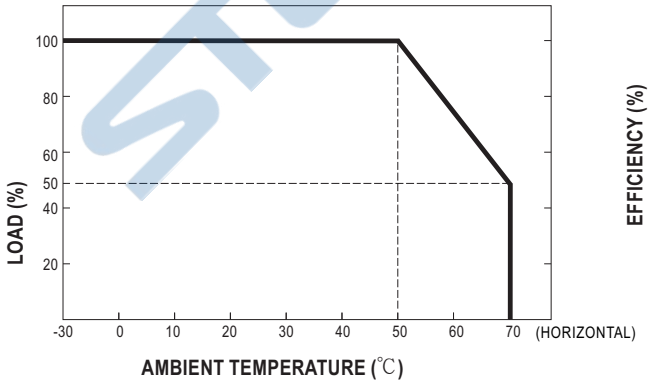

Efficiency vs Load (48V Model)

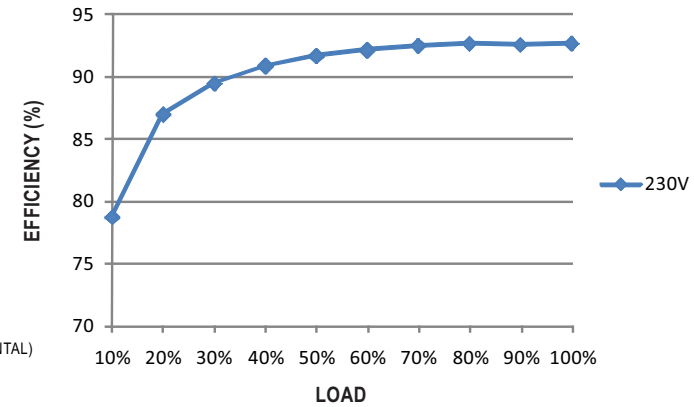

※ The curve above is measured at 230VAC.

STEPPERONLINE®

■ Function Manual

1.Remote Sense

The remote sensing compensates voltage drop on the load wiring up to 0.5V.

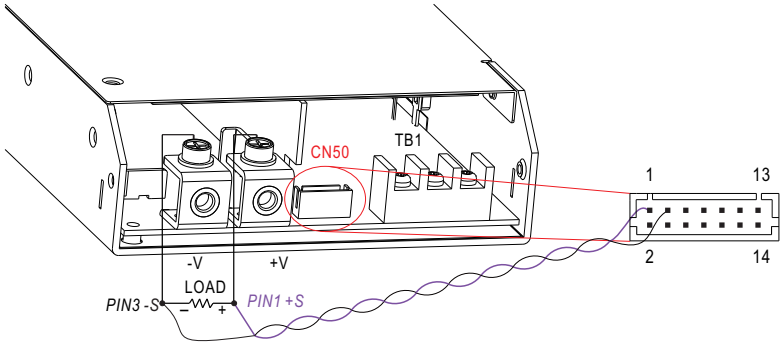

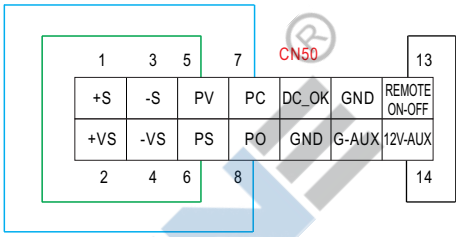

Fig 1.1

◎ The *+S* signal should be connected to the positive terminal of the load whereas *-S* signal to the negative terminal.

◎ By factory default, on CN50, *Remote ON-OFF* (pin13) and *12V-AUX* (pin14), *PV*(pin5) and *PS* (pin6), and *PC* (pin7) and *PO* (pin8, respectively, are shorted when shipped. The power supply will have no output if the shorting connector is not assembled unless certain functin needs to be activated.

2.Remote ON-OFF

※ The power supply can be turned ON/OFF by using the "Remote ON-OFF" function.

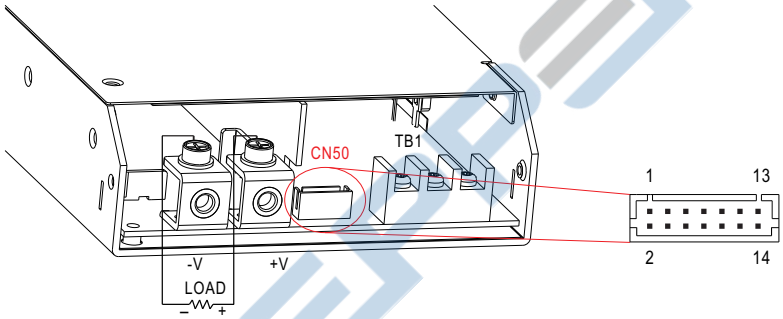

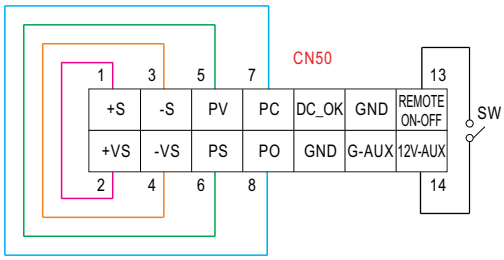

Fig 2.1

Between Remote *ON-OFF(pin13)* and *12V-AUX(pin14)*	Power Supply Status
SW close (Short)	ON
SW open (Open)	OFF

◎ When multiple power supplies need to turn ON/OFF simultaneously by Remote ON-OFF control, -S & -V on CN50, as well as +S & +V, on each power supply should be connected.

STEPERONLINE®

3. Output Voltage Programming (or, PV / remote voltage programming / remote adjust / margin programming / dynamic voltage trim)

※ In addition to the adjustment via the built-in potentiometer, the output voltage can be trimmed to 40~110% of the nominal voltage by applying EXTERNAL VOLTAGE.

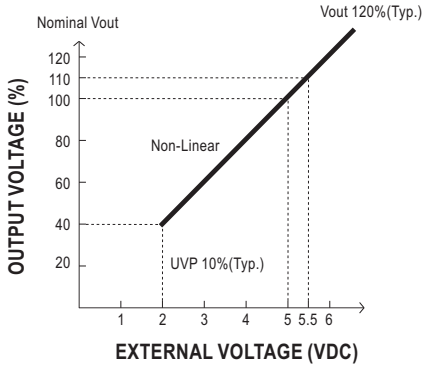

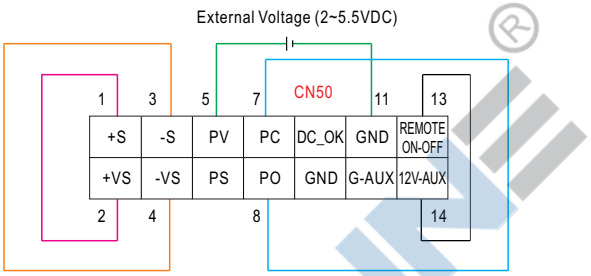

Fig 3.1

◎ If EXTERNAL VOLTAGE (VDC) <0.5V,the power supply may enter under voltage protection; it needs to be restarted to work.

※ Caution: By factory default, the Output Voltage Programming is not activated, and *PV (pin5)* and *PS(pin6)* are shorted by connector. Whenever this function is not needed to activate, as assumed in other sections' diagrams, please keep *PV (pin5)* and *PS(pin6)* shorted ; other wise, the power supply will have no output.

4. Constant Current Level Programming (or, PC / remote current programming / dynamic current trim)

※ The constant current level can be trimmed to 40~110% of the rated current by applying EXTERNAL VOLTAGE.

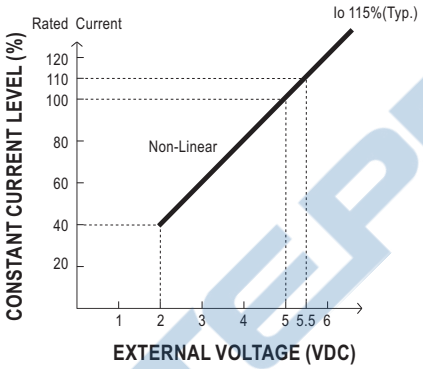

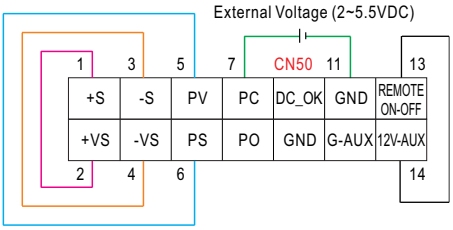

Fig 4.1

※ Caution: By factory default, the Output Current Programming is not activated, and *PC(pin7)* and *PO(pin8)* are shorted by connector. Whenever this function is not needed to activate, as assumed in other sections' diagrams, please keep *PC(pin7)* and *PO(pin8)* shorted ; otherwise, the power supply will have no output.

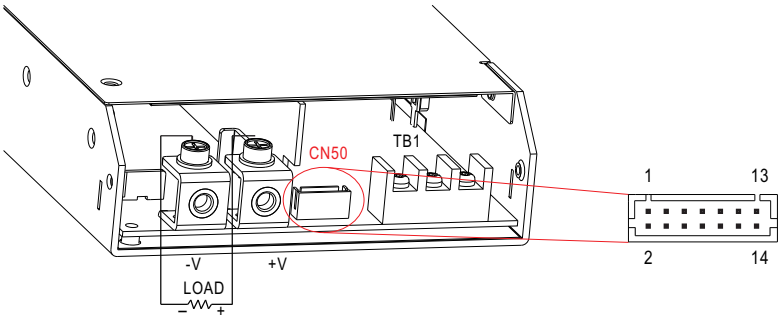

5.DC_OK signal

※ "DC_OK" is an open collector signal. It indicates the output status of the power supply. It can operate in two ways : One is sinking current from external TTL signal ; the other is sending out a TTL voltage signal.

◎ **Sinking current from external TTL signal:** The maximum sink current is 10mA and the maximum external voltage is 5.6V.

◎ **Sending out TTL voltage signal :**

Between *DC- OK(pin9)* and *GND(pin10&11)*	Output Status
0 ~ 1V	Power supply ON
3.3 ~ 5.6V	Power supply OFF

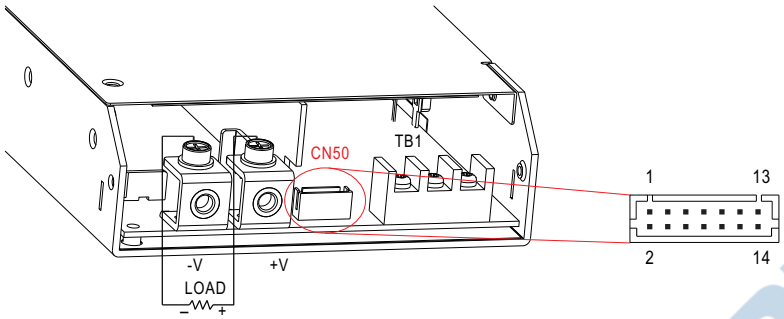

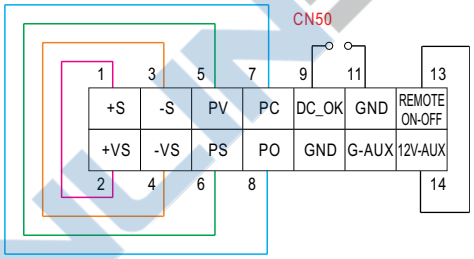

Fig 5.1

STEPPERONLINE ®

■ Mechanical Specification

Case No.212A Unit:mm

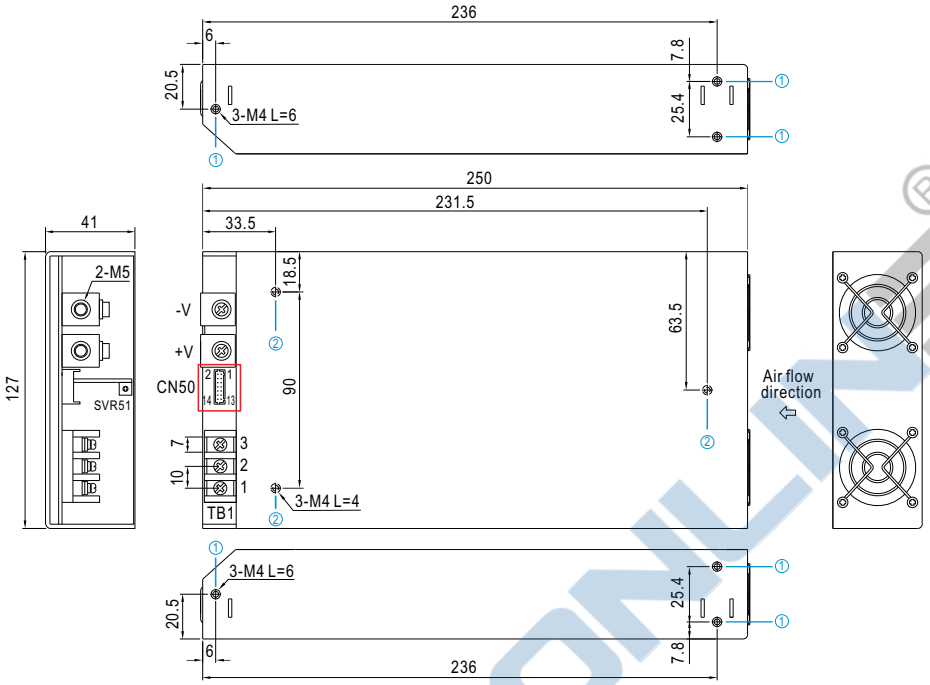

※ Mounting Instruction

Hole No.	Recommended Screw Size	MAX. Penetration Depth L	Recommended mounting torque
①	M4	6mm	7~11Kgf-cm
②	M4	4mm	7~11Kgf-cm

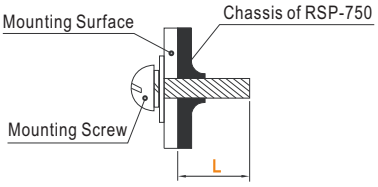

※Control Pin No. Assignment (CN50) : HRS DF11-14DP-2DS or equivalent

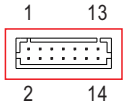

Mating Housing	HRS DF11-14DS or equivalent
Terminal	HRS DF11-**SC or equivalent

Pin No.	Function	Description
1	+S	Positive sensing for remote sense.
2	+VS	+V Signal. The +VS should be connected to the +S to reduce the noise when "output voltage programming" function is in use.
3	-S	Negative sensing for remote sense.
4	-VS	-V Signal. The -VS should be connected to the -S to reduce the noise when "output voltage programming" function is in use.
5	PV	Connect to external DC voltage source for output voltage programming, referenced to pin 10,11 (GND).
6	PS	Reference pin regarding output voltage programming. Please refer to the Function Manual.
7	PC	Connect to external DC voltage source for output current programming.
8	PO	Reference pin regarding output current programming. Please refer to the Function Manual.
9	DC_OK	Open collector signal, referenced to pin10,11(GND). Low when PSU turns on. The maximum sink current is 10mA and the maximum external voltage is 5.6V.
10,11	GND	These pins connect to the negative terminal (-V). Return for DC_OK Signal output.
12	G-AUX	Auxiliary voltage output ground. The signal return is isolated from the output terminals (+V & -V).
13	REMOTE ON-OFF	Turns the output on and off by electrical or dry contact between pin 13 (ON/OFF) and pin 14 (12V-AUX). Short: Power ON, Open: Power OFF.
14	12V-AUX	Auxiliary voltage output, 10.8~13.2V, referenced to pin 12(G-AUX). The maximum load current is 0.1A. This output is not controlled by the "remote ON/OFF control".

STEPRONLINE

※AC Input Terminal Pin No. Assignment

Pin No.	Assignment	Diagram	Maximum mounting torque
1	AC/N	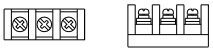	18Kgf-cm
2	AC/L		
3	FG ⏚		

※DC Output Terminal Pin No. Assignment

Assignment	Diagram	Maximum mounting torque
+V, -V	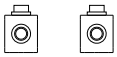	10Kgf-cm

■ Installation Manual

Please refer to : http://www.meanwell.com/manual.html

STEPPERONLINE®