RSP-100 series

100W Single Output with PFC Function

User's Manual

Dimension

L	*	W	*	H	
179	*	99	*	30	mm
7.05	*	3.90	*	1.18	inch

R33100 RoHS CNS14336-1 AS/NZS62368-1 UL62368-1 BS EN/EN62368-1 BS EN/EN61558-1 BS EN/EN61558-2-16 GB4943.1 TPTC004 IEC62368-1

Industrial Automate Telecom Network EV

Features

- Universal AC input / Full range
- Built-in active PFC function
- High efficiency up to 88%
- Cooling by free air convection
- Built-in remote ON-OFF control
- Protections: Short circuit / Overload / Over voltage / Over temperature
- LED indicator for power on
- 3 years warranty

Applications

- Factory control or automation apparatus
- Test and measurement instrument
- Laser related machine
- Burn-in facility
- RF application

GTIN CODE

MW Search: https://www.meanwell.com/serviceGTIN.aspx

Description

RSP-100 is a 100W single output enclosed type AC/DC power supply. This series operates for 85~264VAC input voltage and offers the models with the DC output mostly demanded from the industry. Each model is cooled by free air convection, working for the temperature up to 70℃.

Model Encoding / Order Information

RSP - 100 - 15

- 15 — Output voltage (3.3V/5V/7.5V/12V/13.5V/15V/24V/27V/48V)
- 100 — Output wattage
- RSP — Series name

SPECIFICATION

MODEL		RSP-100-3.3	RSP-100-5	RSP-100-7.5	RSP-100-12	RSP-100-13.5	RSP-100-15	RSP-100-24	RSP-100-27	RSP-100-48
OUTPUT	DC VOLTAGE	3.3V	5V	7.5V	12V	13.5V	15V	24V	27V	48V
	RATED CURRENT	20A	20A	13.5A	8.5A	7.5A	6.7A	4.2A	3.8A	2.1A
	CURRENT RANGE	0 ~ 20A	0 ~ 20A	0 ~ 13.5A	0 ~ 8.5A	0 ~ 7.5A	0 ~ 6.7A	0 ~ 4.2A	0 ~ 3.8A	0 ~ 2.1A
	RATED POWER	66W	100W	101.25W	102W	101.25W	100.5W	100.8W	102.6W	100.8W
	RIPPLE & NOISE (max.) Note.2	100mVp-p	100mVp-p	100mVp-p	100mVp-p	100mVp-p	100mVp-p	150mVp-p	150mVp-p	250mVp-p
	VOLTAGE ADJ. RANGE	3.14 ~ 3.63V	4.75 ~ 5.5V	7.13 ~ 8.25V	11.4 ~ 13.2V	12.8 ~ 14.9V	14.3 ~ 16.5V	22.8 ~ 26.4V	25.7 ~ 29.7V	45.6 ~ 52.8V
	VOLTAGE TOLERANCE Note.3	±2.0%	±2.0%	±2.0%	±1.0%	±1.0%	±1.0%	±1.0%	±1.0%	±1.0%
	LINE REGULATION	±0.5%	±0.5%	±0.5%	±0.5%	±0.5%	±0.5%	±0.5%	±0.5%	±0.5%
	LOAD REGULATION	±1.0%	±1.0%	±1.0%	±0.5%	±0.5%	±0.5%	±0.5%	±0.5%	±0.5%
	SETUP, RISE TIME	600ms, 30ms at full load								
	HOLD UP TIME (Typ.)	16ms at full load								
INPUT	VOLTAGE RANGE	85 ~ 264VAC 120 ~ 370VDC								
	FREQUENCY RANGE	47 ~ 63Hz								
	POWER FACTOR (Typ.)	PF>0.93/230VAC PF>0.98/115VAC at full load								
	EFFICIENCY (Typ.)	83%	86%	87%	86%	86.5%	87%	87%	87%	88%
	AC CURRENT (Typ.)	1.1A/115VAC 0.55A/230VAC								
	INRUSH CURRENT (Typ.)	COLD START 30A/230VAC								
	LEAKAGE CURRENT	<2mA / 240VAC								
PROTECTION	OVERLOAD	105 ~ 135% rated output power								
		Protection type : Constant current limiting, recovers automatically after fault condition is removed								
	OVER VOLTAGE	3.63 ~ 4.46V	5.5 ~ 6.75V	8.25 ~ 10.13V	13.2 ~ 16.2V	14.85 ~ 18.23V	16.5 ~ 20.25V	26.4 ~ 32.4V	29.7 ~ 36.45V	52.8 ~ 64.8V
		Protection type : Shut down o/p voltage, re-power on to recover								
	OVER TEMPERATURE	Shut down o/p voltage, recovers automatically after temperature goes down								
FUNCTION	REMOTE CONTROL	CN1: < 0~0.8VDC POWER ON , 4~10VDC POWER OFF								
ENVIRONMENT	WORKING TEMP.	-30 ~ +70℃ (Refer to "Derating Curve")								
	WORKING HUMIDITY	20 ~ 90% RH non-condensing								
	STORAGE TEMP., HUMIDITY	-40 ~ +85℃, 10 ~ 95% RH non-condensing								
	TEMP. COEFFICIENT	±0.05%/℃ (0 ~ 50℃)								
	VIBRATION	10 ~ 500Hz, 2G 10min./1cycle, 60min. each along X, Y, Z axes								
	OVER VOLTAGE CATEGORY	Ⅲ ; According to EN61558, EN50178,EN60664-1, EN62477-1 ; altitude up to 2000 meters								
SAFETY & EMC (Note 4)	SAFETY STANDARDS	UL62368-1, TUV BS EN/EN62368-1, BS EN/EN61558-1, BS EN/EN61558-2-16, EAC TP TC 004, CCC GB4943.1, BSMI CNS14336-1 approved, Design refer to AS/NZS 62368.1								
	WITHSTAND VOLTAGE	I/P-O/P:4KVAC I/P-FG:2KVAC O/P-FG:0.5KVAC								
	ISOLATION RESISTANCE	I/P-O/P, I/P-FG, O/P-FG:100M Ohms / 500VDC / 25℃/ 70% RH								
	EMC EMISSION	Compliance to BS EN/EN55032 (CISPR32) Class B, BS EN/EN61000-3-2,-3, EAC TP TC 020, CNS13438, GB9254 Class B, GB17625.1								
	EMC IMMUNITY	Compliance to BS EN/EN61000-4-2,3,4,5,6,8,11, BS EN/EN55024, light industry level, EAC TP TC 020								
OTHERS	MTBF	2325.2K hrs min. Telcordia SR-332 (Bellcore) ; 288.5K hrs min. MIL-HDBK-217F (25℃)								
	DIMENSION	179*99*30mm (L*W*H)								
	PACKING	0.52Kg; 24pcs/14.5Kg/0.81CUFT								

NOTE

1. All parameters NOT specially mentioned are measured at 230VAC input, rated load and 25℃ of ambient temperature.
2. Ripple & noise are measured at 20MHz of bandwidth by using a 12" twisted pair-wire terminated with a 0.1uf & 47uf parallel capacitor.
3. Tolerance : includes set up tolerance, line regulation and load regulation.
4. The power supply is considered a component which will be installed into a final equipment. The final equipment must be re-confirmed that it still meets EMC directives. For guidance on how to perform these EMC tests, please refer to "EMI testing of component power supplies." (as available on http://www.meanwell.com)
5. Strongly recommended that external output capacitance should not exceed 5000uF. (Only for: RSP-100-3.3/-5/-7.5)
6. The ambient temperature derating of 3.5℃/1000m with fanless models and of 5℃/1000m with fan models for operating altitude higher than 2000m(6500ft).

※ Product Liability Disclaimer : For detailed information, please refer to https://www.meanwell.com/serviceDisclaimer.aspx

STEPONLINE®

■ Mechanical Specification

Case No.227A Unit:mm

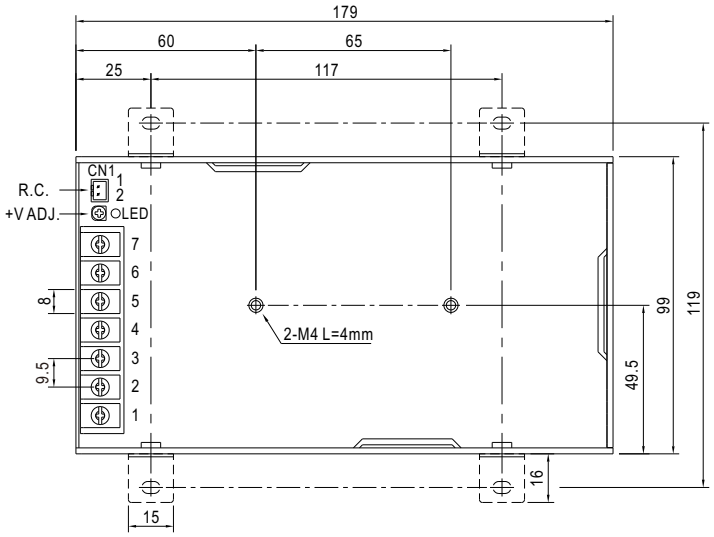

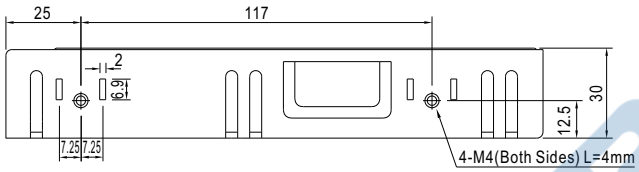

Terminal Pin No. Assignment

Pin No.	Assignment	Pin No.	Assignment
1	AC/L	4,5	DC OUTPUT -V
2	AC/N	6,7	DC OUTPUT +V
3	FG ⏚		

Remote ON/OFF(CN1): JST S2B-XH or equivalent(optional)

Pin No.	Assignment	Mating Housing	Terminal
1	RC+	JST XHP or equivalent	JST SXH-001T-P0.6 or equivalent
2	RC-		

■ Block Diagram

PFC fosc : 100KHz
PWM fosc : 100KHz

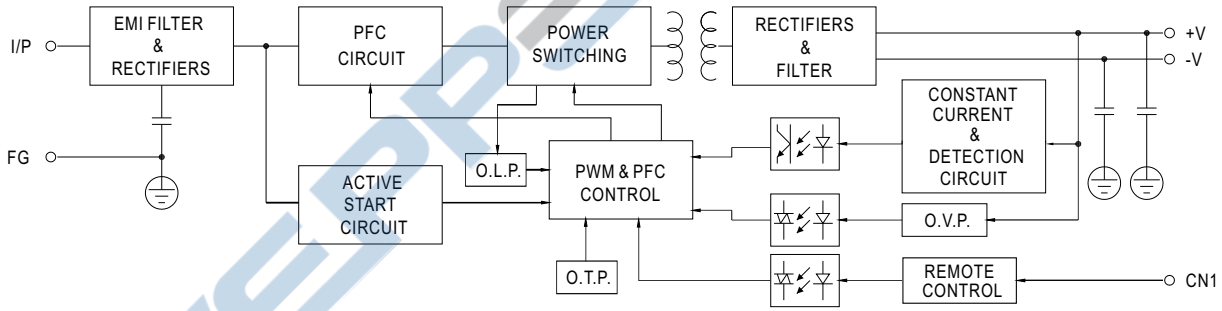

■ Derating Curve

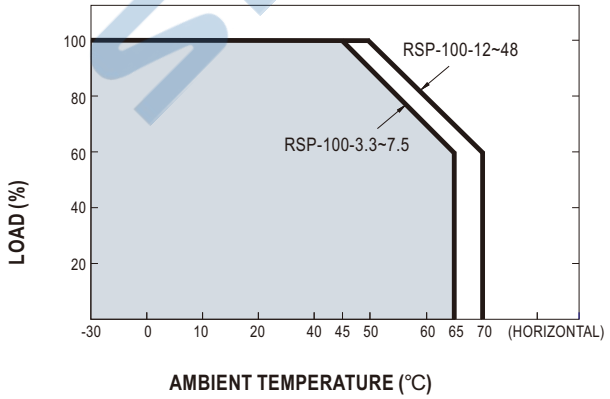

■ Output Derating VS Input Voltage

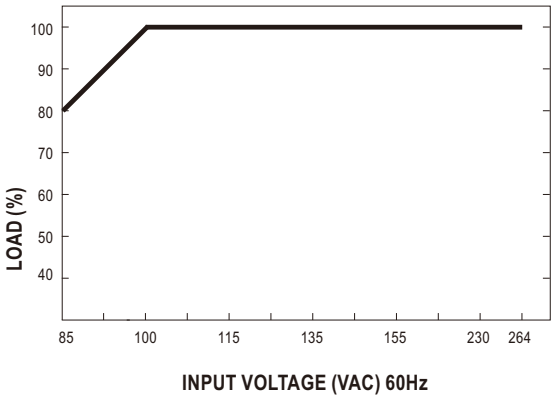

STEPPERONLINE ®