60W Single Output Industrial DIN Rail Power Supply

MDR-60 series

User's Manual

■ Features :

- Universal AC input/Full range
- Protections: Short circuit / Overload / Over voltage
- Cooling by free air convection
- Can be installed on DIN rail TS-35/7.5 or 15
- Class I, Div 2 Hazardous Locations T4
- LED indicator for power on
- DC OK relay contact
- No load power consumption<0.75W
- 100% full load burn-in test
- 3 years warranty

■ GTIN CODE

MW Search: https://www.meanwell.com/serviceGTIN.aspx

UL62368-1 R33100 RoHS TPTC004 IS13252 (except 5V) BS EN/EN62368-1 IEC62368-1

SPECIFICATION

MODEL		MDR-60-5	MDR-60-12	MDR-60-24	MDR-60-48
OUTPUT	DC VOLTAGE	5V	12V	24V	48V
	RATED CURRENT	10A	5A	2.5A	1.25A
	CURRENT RANGE	0 ~ 10A	0 ~ 5A	0 ~ 2.5A	0 ~ 1.25A
	RATED POWER	50W	60W	60W	60W
	RIPPLE & NOISE (max.) Note.2	80mVp-p	120mVp-p	150mVp-p	200mVp-p
	VOLTAGE ADJ. RANGE	5 ~ 6V	12 ~ 15V	24 ~ 30V	48 ~ 56V
	VOLTAGE TOLERANCE Note.3	±2.0%	±1.0%	±1.0%	±1.0%
	LINE REGULATION	±1.0%	±1.0%	±1.0%	±1.0%
	LOAD REGULATION	±1.5%	±1.0%	±1.0%	±1.0%
	SETUP, RISE TIME Note.5	500ms, 30ms/230VAC 500ms, 30ms/115VAC at full load			
	HOLD UP TIME (Typ.)	50ms/230VAC 20ms/115VAC at full load			
INPUT	VOLTAGE RANGE	85 ~ 264VAC 120 ~ 370VDC			
	FREQUENCY RANGE	47 ~ 63Hz			
	EFFICIENCY (Typ.)	78%	86%	88%	87%
	AC CURRENT (Typ.)	1.8A/115VAC 1A/230VAC			
	INRUSH CURRENT (Typ.)	COLD START 30A/115VAC 60A/230VAC			
	LEAKAGE CURRENT	<1mA / 240VAC			
PROTECTION	OVERLOAD	105 ~ 150% rated output power			
		Protection type : Constant current limiting, recovers automatically after fault condition is removed			
	OVER VOLTAGE	6.25 ~ 7.25V	15.6 ~ 18V	31.2 ~ 36V	57.6 ~ 64.8V
		Protection type : Shut down o/p voltage, re-power on to recover			
FUNCTION	DC OK SIGNAL	Relay contact rating(max.): 30V/1A resistive			
ENVIRONMENT	WORKING TEMP.	-20 ~ +70℃ (Refer to "Derating Curve")			
	WORKING HUMIDITY	20 ~ 90% RH non-condensing			
	STORAGE TEMP., HUMIDITY	-40 ~ +85℃, 10 ~ 95% RH			
	TEMP. COEFFICIENT	±0.03%/℃ (0 ~ 50℃)			
	VIBRATION	Component : 10 ~ 500Hz, 2G 10min./1cycle, period for 60min. each along X, Y, Z axes ; Mounting : Compliance to IEC60068-2-6			
SAFETY & EMC (Note 4)	SAFETY STANDARDS	UL508, UL62368-1, TUV BS EN/EN62368-1,Class I, Div. 2 Group A, B, C, D Hazardous Locations T4, EAC TP TC 004, BSMI CNS14336-1, AS/NZS 60950.1 , IS13252(Part1)/IEC60950-1approved			
	WITHSTAND VOLTAGE	I/P-O/P:3KVAC I/P-FG:2KVAC O/P-FG:0.5KVAC			
	ISOLATION RESISTANCE	I/P-O/P, I/P-FG, O/P-FG:>100M Ohms / 500VDC / 25℃/ 70% RH			
	EMC EMISSION	Compliance to BS EN/EN55032 (CISPR32), BS EN/EN61204-3 Class B, BS EN/EN61000-3-2,-3, EAC TP TC 020, CNS13438 Class B			
	EMC IMMUNITY	Compliance to BS EN/EN61000-4-2, 3, 4, 5, 6, 8, 11, BS EN/EN55024, BS EN/EN61000-6-2, BS EN/EN61204-3, heavy industry level, EAC TP TC 020			
OTHERS	MTBF	2355.2K hrs min. Telcordia SR-332 (Bellcore) ; 489.9K hrs min. MIL-HDBK-217F (25℃)			
	DIMENSION	40*90*100mm (W*H*D)			
	PACKING	0.33Kg; 42pcs/14.8Kg/0.82CUFT			

NOTE

1. All parameters NOT specially mentioned are measured at 230VAC input, rated load and 25℃ of ambient temperature.
2. Ripple & noise are measured at 20MHz of bandwidth by using a 12" twisted pair-wire terminated with a 0.1uf & 47uf parallel capacitor.
3. Tolerance : includes set up tolerance, line regulation and load regulation.
4. The power supply is considered a component which will be installed into a final equipment. The final equipment must be re-confirmed that it still meets EMC directives. For guidance on how to perform these EMC tests, please refer to "EMI testing of component power supplies." (as available on http://www.meanwell.com)
5. Length of set up time is measured at first cold start. Turning ON/OFF the power supply may lead to increase of the set up time.
6. The ambient temperature derating of 3.5℃/1000m with fanless models and of 5℃/1000m with fan models for operating altitude higher than 2000m(6500ft).

※ Product Liability Disclaimer : For detailed information, please refer to https://www.meanwell.com/serviceDisclaimer.aspx

Mechanical Specification

Case No.962A Unit:mm

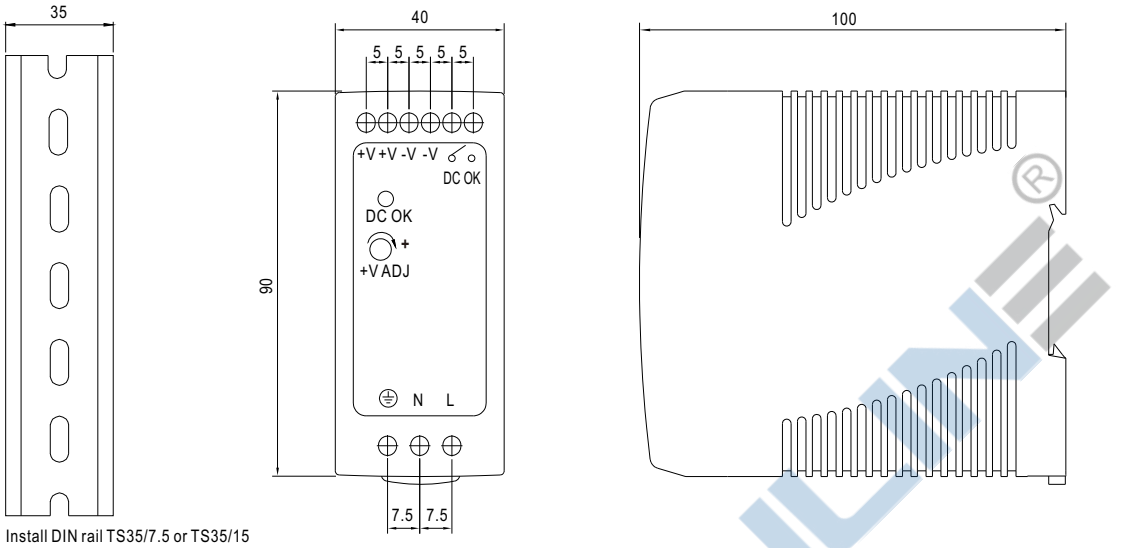

Block Diagram

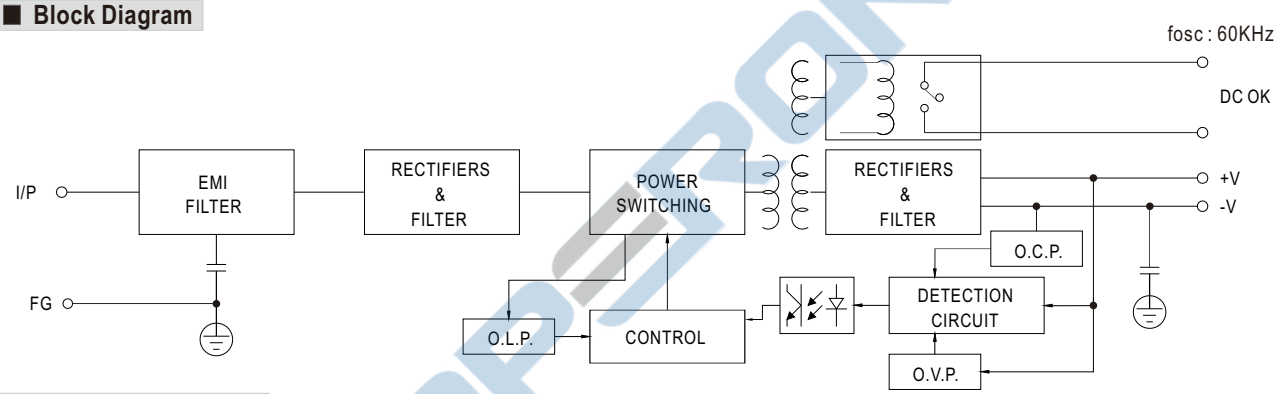

DC OK Relay Contact

Contact Close	PSU turns on / DC OK.
Contact Open	PSU turns off / DC Fail.
Contact Ratings (max.)	30V/1A resistive load.

Derating Curve

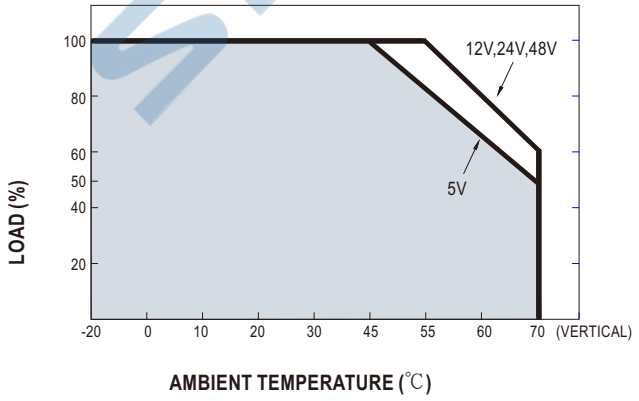

Output Derating VS Input Voltage

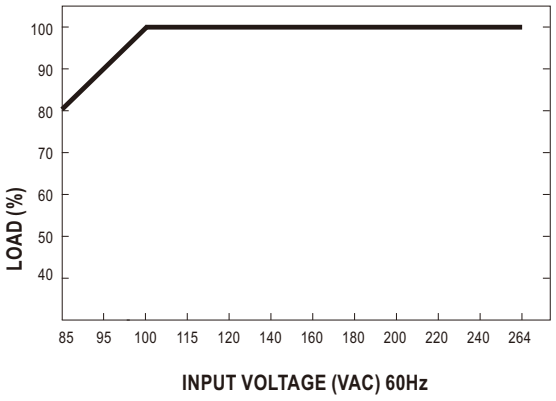

STEPPERONLINE