150W Ultra Slim Step Shape DIN Rail

HDR-150 series

User's Manual

UL61010 | UL62368-1 | BS EN/EN61558 | TPTC004 | IEC62368-1

ECO | Household | Automate | Industrial | Security | Network | Telecom

Features

- Ultra slim design with 105mm(6SU) width
- Universal input 85~264VAC(277VAC operational)
- No load power consumption<0.3W
- Isolation class Ⅱ
- DC output voltage adjustable
- Protections : Short circuit / Overload / Over voltage
- Cooling by free air convection
- DIN rail TS-35/7.5 or 15 mountable
- Over voltage category Ⅲ
- LED indicator for power on
- 3 years warranty

Applications

- Household control system
- Building automation
- Industrial control system
- Factory automation
- Electro-mechanical apparatus

Description

HDR-150 is an economical ultra slim 150W DIN rail power supply series, adapt to be installed on TS-35/7.5 or TS-35/15 mounting rails. The body is designed 105mm(6SU) in width, which allows space saving inside the cabinets. The entire series adopts the full range AC input from 85VAC to 264VAC(277VAC operational) and conforms to BS EN/EN61000-3-2, the norm the European Union regulates for harmonic current.

HDR-150 is designed with plastic housing that it can effectively prevent user from electric hazards. With working efficiency up to 90.5%, the entire series can operate at the ambient temperature between -30℃ and 70℃ under air convection. The complete protection functions and relevant certificates for home automations and industrial control apparatus (IEC62368-1,UL62368-1,UL61010, BS EN/EN61558-2-16) make HDR-150 a very competitive power supply solution for household and industrial applications.

Model Encoding

HDR - 150 - 12

- 12 — Output voltage
- 150 — Rated wattage
- HDR — Series name

SPECIFICATION

MODEL			HDR-150-12	HDR-150-15	HDR-150-24	HDR-150-48
OUTPUT	DC VOLTAGE		12V	15V	24V	48V
	RATED CURRENT	115VAC	10.2A	8.55A	5.31A	2.72A
		230VAC	11.3A	9.5A	6.25A	3.2A
	RATED POWER	115VAC	122.4W	128.3W	127.4W	130.6W
		230VAC	135.6W	142.5W	150W	153.6W
	RIPPLE & NOISE (max.) Note.2		100mVp-p	120mVp-p	150mVp-p	200mVp-p
	VOLTAGE ADJ. RANGE		10.8~ 13.8V	13.5 ~ 18V	21.6 ~ 29V	43.2 ~ 55.2V
	VOLTAGE TOLERANCE Note.3		±2.0%	±1.0%	±1.0%	±1.0%
	LINE REGULATION		±1.0%	±1.0%	±1.0%	±1.0%
	LOAD REGULATION		±1.0%	±1.0%	±1.0%	±1.0%
	SETUP, RISE TIME		500ms, 60ms/230VAC 500ms, 60ms/115VAC at full load			
	HOLD UP TIME (Typ.)		30ms/230VAC 12ms/115VAC at full load			
INPUT	VOLTAGE RANGE		85 ~ 264VAC (277VAC operational) 120 ~ 370VDC (390VDC operational)			
	FREQUENCY RANGE		47 ~ 63Hz			
	EFFICIENCY (Typ.)		89%	89.5%	90.5%	90.5%
	AC CURRENT (Typ.)		3A/115VAC 1.6A/230VAC			
	INRUSH CURRENT (Typ.)		COLD START 35A/115VAC 70A/230VAC			
PROTECTION	OVERLOAD		105 ~ 135% rated output power			
			Hiccup mode when output voltage <50%, recovers automatically after fault condition is removed Constant current limiting within 50% ~100% rated output voltage, recovers automatically after fault condition is removed			
	OVER VOLTAGE		14.2 ~ 16.2V	18.8 ~ 22.5V	30 ~ 36V	56.5 ~ 64.8V
			Protection type : Shut down o/p voltage, re-power on to recover			
ENVIRONMENT	WORKING TEMP.		-30 ~ +70℃ (Refer to "Derating Curve")			
	WORKING HUMIDITY		20 ~ 90% RH non-condensing			
	STORAGE TEMP., HUMIDITY		-40 ~ +85℃, 10 ~ 95% RH non-condensing			
	TEMP. COEFFICIENT		±0.03%/℃ (0 ~ 45℃) RH non-condensing			
	VIBRATION		10 ~ 500Hz, 2G 10min./1cycle, period for 60min. each along X, Y, Z axes; Mounting: Compliance to IEC60068-2-6			
	OPERATING ALTITUDE		2000 meters (Note 4)			
	OVER VOLTAGE CATEGORY		Ⅲ ; According to EN62368,EN61558, EN50178,EN60664-1, EN62477-1 ; altitude up to 2000 meters			
SAFETY & EMC (Note.7)	SAFETY STANDARDS		IEC62368-1, UL62368-1, UL61010, TUV BS EN/EN61558-2-16, BS EN/EN61558-1, EAC TP TC 004 approved; Design refer to BS EN/EN50178, TUV BS EN/EN62368-1			
	WITHSTAND VOLTAGE		I/P-O/P:4KVAC			
	ISOLATION RESISTANCE		I/P-O/P:100M Ohms / 500VDC / 25℃/ 70% RH			
	EMC EMISSION		**Parameter**	**Standard**	**Test Level / Note**	
			Conducted	BS EN/EN55032(CISPR32)	Class B	
			Radiated	BS EN/EN55032(CISPR32)	Class B (note 5)	
			Harmonic Current (Note 6)	BS EN/EN61000-3-2	Class A	
			Voltage Flicker	BS EN/EN61000-3-3	-------	
	EMC IMMUNITY		BS EN/EN55024, BS EN/EN61000-6-2			
			Parameter	**Standard**	**Test Level /Note**	
			ESD	BS EN/EN61000-4-2	Level 3, 8KV air; Level 2, 4KV contact, criteria A	
			Radiated Susceptibility	BS EN/EN61000-4-3	Level 3, criteria A	
			EFT/Burest	BS EN/EN61000-4-4	Level 3, criteria A	
			Surge	BS EN/EN61000-4-5	Level 4,2KV/L-N, criteria A	
			Conducted	BS EN/EN61000-4-6	Level 3, criteria A	
			Magnetic Field	BS EN/EN61000-4-8	Level 4, criteria A	
			Voltage Dips and interruptions	BS EN/EN61000-4-11	>95% dip 0. 5 periods, 30% dip 25 periods, >95% interruptions 250 periods	
OTHERS	MTBF		536K hrs min. MIL-HDBK-217F (25℃)			
	DIMENSION		105*90*54.5mm (W*H*D)			
	PACKING		0.31Kg; 32pcs/11Kg/1.0CUFT			

NOTE

1. All parameters NOT specially mentioned are measured at 230VAC input, rated load and 25℃ of ambient temperature.
2. Ripple & noise are measured at 20MHz of bandwidth by using a 12" twisted pair-wire terminated with a 0.1μf & 47μf parallel capacitor.
3. Tolerance : includes set up tolerance, line regulation and load regulation.
4. The ambient temperature derating of 3.5℃/1000m with fanless models and of 5℃/1000m with fan models for operating altitude higher than 2000m(6500ft).
5. When the input voltage is 230VAC,delivers EMI Class B for radiated emission for the power supply; When the input voltage is 110VAC, delivers EMI Class A for radiated emission for the power supply.
6. Harmonic current test at 70% load .
7. The power supply is considered as an independent unit, but the final equipment still need to re-confirm that the whole system complies with the EMC directives. For guidance on how to perform these EMC tests, please refer to "EMI testing of component power supplies." (as available on http://www.meanwell.com)

※ Product Liability Disclaimer : For detailed information, please refer to https://www.meanwell.com/serviceDisclaimer.aspx

STEPHERONLINE®

Block Diagram

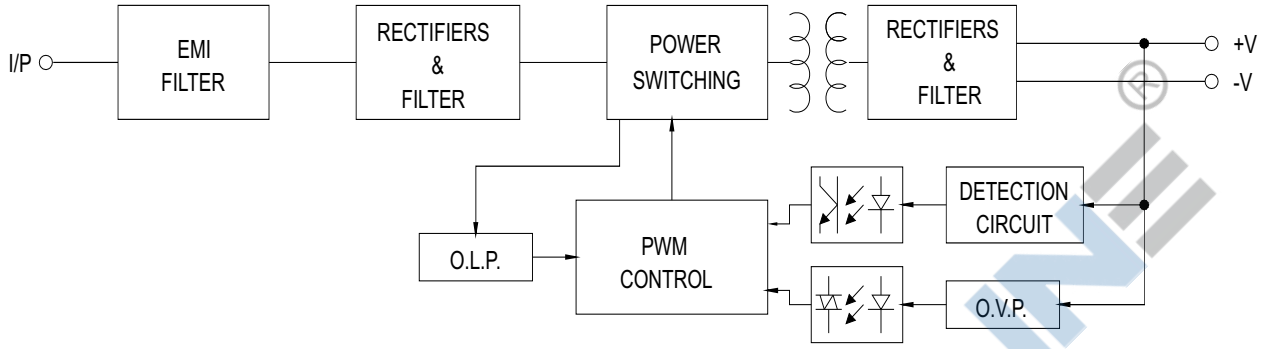

Derating Curve VS Ambient Temperature

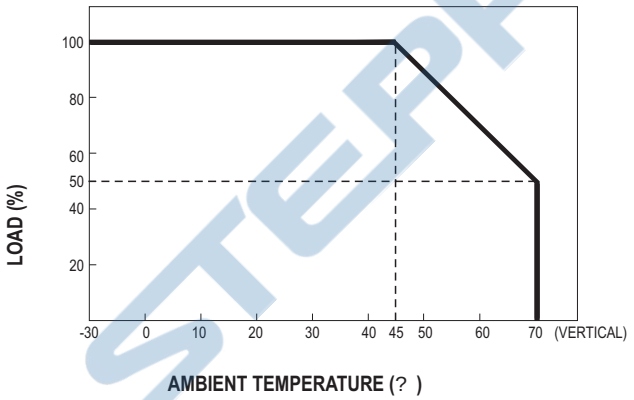

Output Derating VS Input Voltage

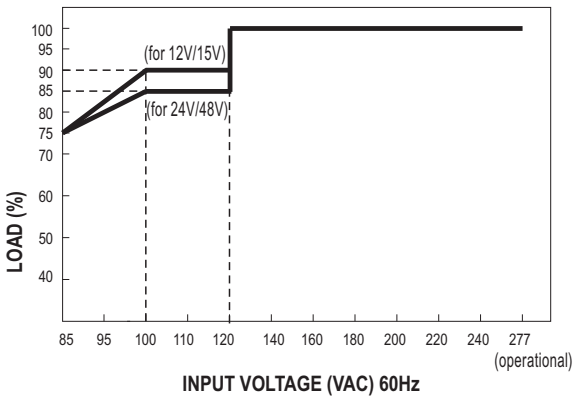

STEPPERONLINE

Mechanical Specification

(Unit: mm , tolerance ± 0.5mm)

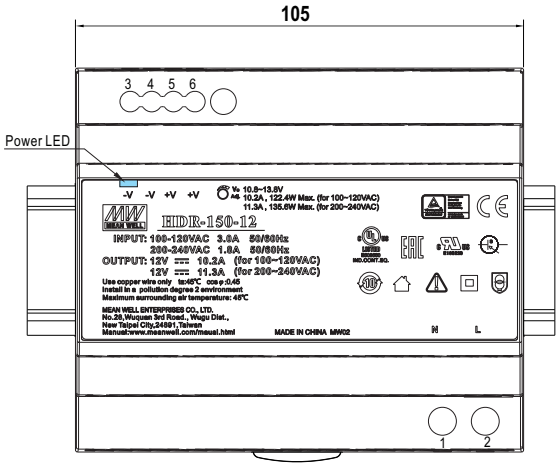

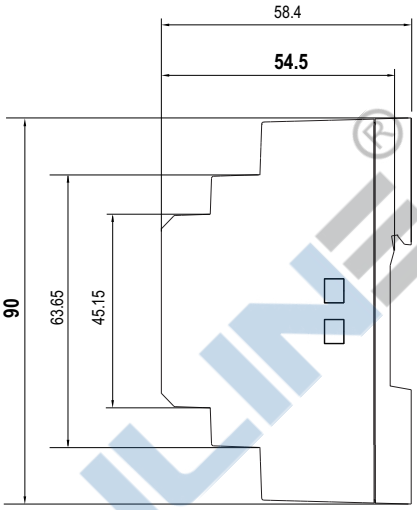

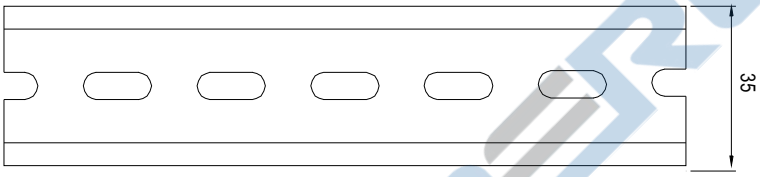

ADMISSIBLE DIN-RAIL:TS35/7.5 OR TS35/15

Terminal Pin No. Assignment

Pin No.	Assignment	Pin No.	Assignment
1	AC/N	3,4	-V
2	AC/L	5,6	+V

Installation Manual

Please refer to : http://www.meanwell.com/manual.html

STEPPERONLINE