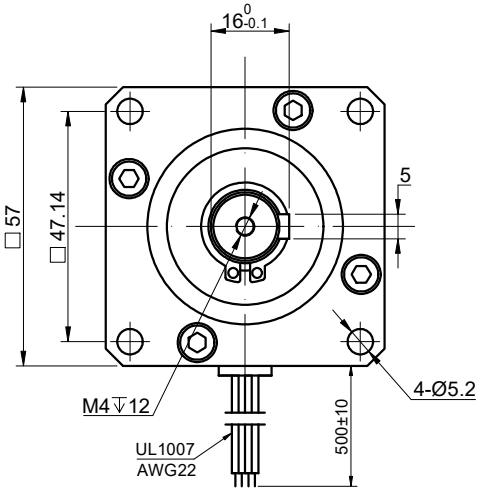

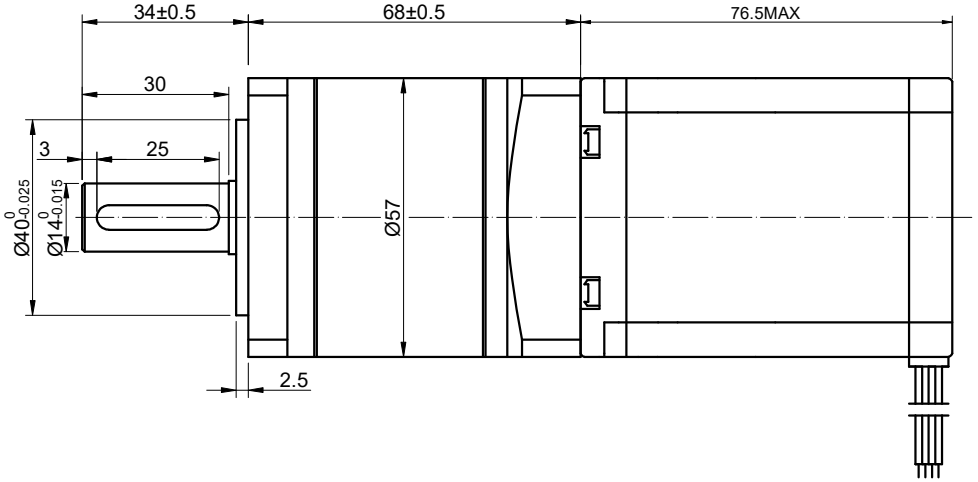

SPECIFICATION \ CONNECTION	BIPOLAR
AMPS/PHASE	2.90
RESISTANCE/PHASE(Ohms)@25°C	1.13±10%
INDUCTANCE/PHASE(mH)@1KHz	4.80±20%
HOLDING TORQUE w/o GEARBOX(Nm)[lb-in]	1.89[16.73]
GEAR RATIO	20
EFFICIENCY	80.00%
STEP ANGLE w/o GEARBOX(°)	1.80
BACKLASH@NO-LOAD	<=45
MAX.PERMISSIBLE TORQUE(Nm)	25.00
MOMENT PERMISSIBLE TORQUE(Nm)	50.00
SHAFT MAXIMUM AXIAL LOAD(N)	200.00
SHAFT MAXIMUM RADIAL LOAD(N)	400.00
TEMPERATURE RISE:MAX.80°C（MOTOR STANDSTILL;FOR 2PHASE ENERGIZED）	
AMBIENT TEMPERATURE -10°C~50°C[14°F~122°F]	
INSULATION CLASS B 130°C[266°F]	

TYPE OF CONNECTION (EXTERN)		MOTOR	
PIN NO	BIPOLAR	LEADS	WINDING
1	A —	BLK	A
2	A\ —	GRN	A\
3	B —	RED	B
4	B\ —	BLU	B\

FULL STEP 2 PHASE-Ex. ,
WHEN FACING MOUNTING END (X)

STEP	A	B	A\	B\		CCW
1	+	+	-	-	↓	↑
2	-	+	+	-		
3	-	-	+	+		
4	+	-	-	+	CW	

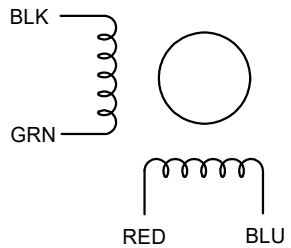

STEPPERONLINE®

	APVD		12.14.2022
	CHKD		
1:1	DRN		
SCALE	SIGNATURE		DATE

STEPPER MOTOR

23HS30-2904S-MG20