END COVER COLOR: BLACK

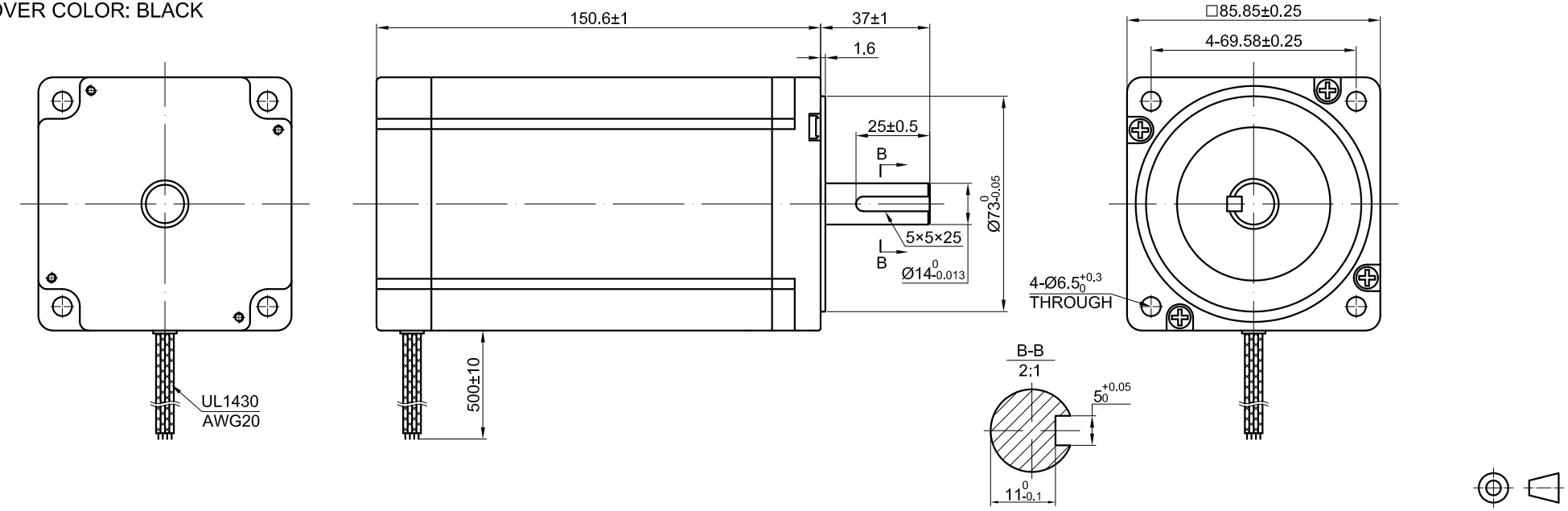


| SPECIFICATION / CONNECTION | BIPOLAR |
|---|---|
| AMPS/PHASE | 6.00 |
| RESISTANCE/PHASE(Ohms)@20°C | 0.72±10% |
| INDUCTANCE/PHASE(mH)@1KHz | 6.50±20% |
| HOLDING TORQUE(Nm)[lb-in] | 12.00 [106.29] |
| STEP ANGLE(°) | 1.8±0.09 |
| MAXIMUM RADIAL RUNOUT(mm)@LOAD 450g | 0.025 |
| MAXIMUM AXIAL RUNOUT(mm)@LOAD 920g | 0.075 |
| ROTOR INERTIA(g-cm²) | 5400 |
| WEIGHT(Kg)[lb] | — |

TEMPERATURE RISE:MAX.80°C（MOTOR STANDSTILL;FOR 2PHASE ENERGIZED）

OPERATION AMBIENT TEMPERATURE 0°C~50°C[ 32°F~122°F]

INSULATION RESISTANCE 100 Mohm（UNDER NORMAL TEMPERATURE AND HUMIDITY）

INSULATION CLASS B 130°C[266°F]

DIELECTRIC STRENGTH 500VAC FOR 1MIN.(BETWEEN THE MOTOR COILS AND THE MOTOR CASE)

| TYPE OF CONNECTION (EXTERN) | | MOTOR | |
|---|---|---|---|
| PIN NO | BIPOLAR | LEADS | WINDING |
| 1 | A — | BLK | A |
| 2 | A\ — | GRN | A\ |
| 3 | B — | RED | B |
| 4 | B\ — | BLU | B\ |

FULL STEP 2 PHASE-Ex. ,
WHEN FACING MOUNTING END (X)

| STEP | A | B | A\ | B\ | CCW ↓ | ↑ CW |
|---|---|---|---|---|---|---|
| 1 | + | + | - | - | | |
| 2 | - | + | + | - | | |
| 3 | - | - | + | + | | |
| 4 | + | - | - | + | | |

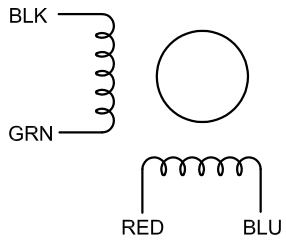


| | | | |
|---|---|---|---|
| | APVD | | 7.12.2019 |
| | CHKD | | |
| 1:2 | DRN | | |
| SCALE | SIGNATURE | | DATE |

STEPPERONLINE®

# STEPPER MOTOR

## 34HP59-6004S