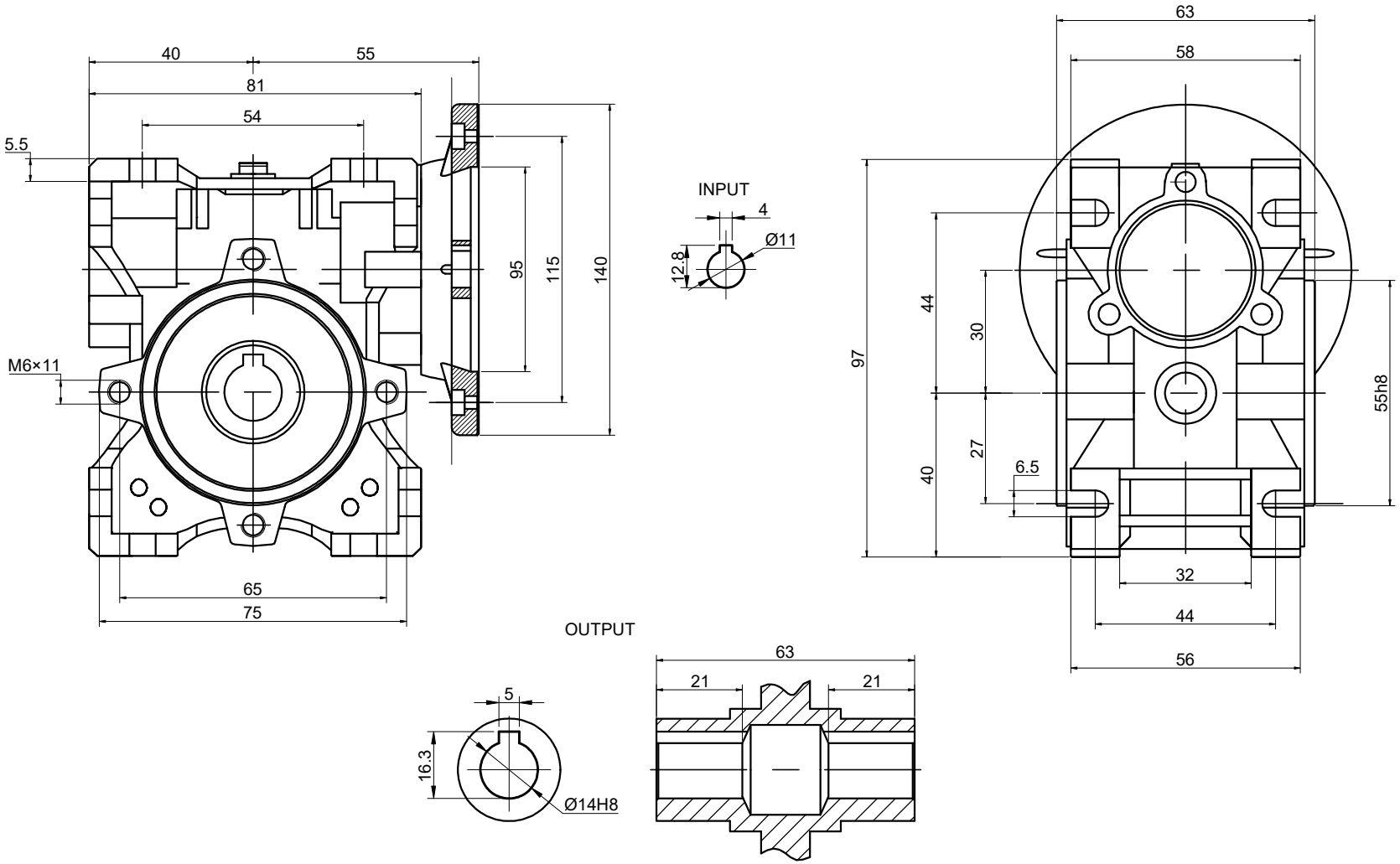

STEPPERONLINE®		APVD	HW	1.23.2024
		CHKD		
	2:3	DRN	LDJ	1.19.2024
	SCALE	SIGNATURE		DATE

WORM GEAR SPEED REDUCER

MRVR030CB3-G25-D11