MODEL NO.	F55B150-48GU-30S/5GU30RT	DWG NO.	A5569

CUSTOMER'S MODEL: NO MODEL
END COVER COLOR: BLUE

REV.	REVISION RECORD	BY	DATE
0	ORIGIN	MYX	12.25.2025

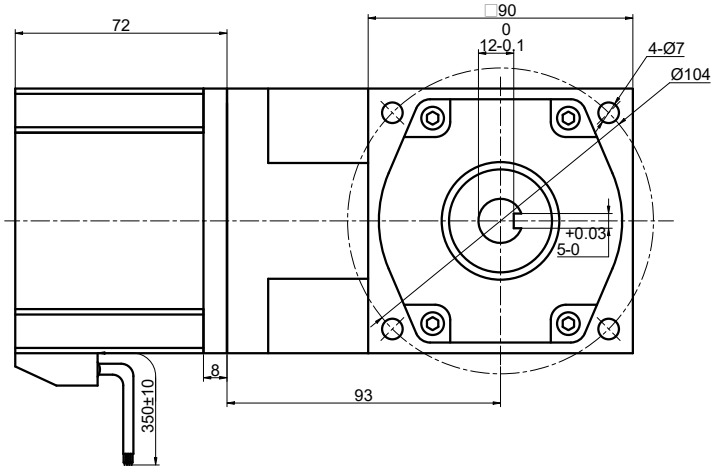

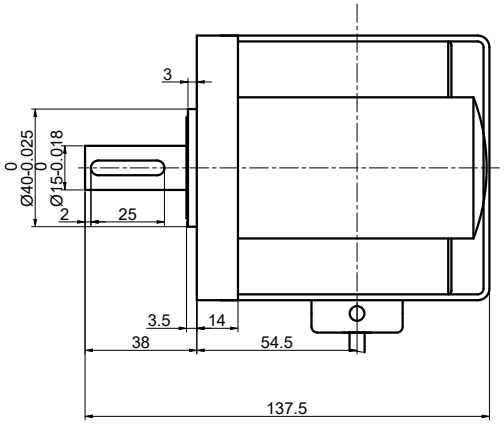

SPECIFICATION	VALUE
NO. of PHASES	3
NO. of POLES	10
RATED VOLTAGE(V):	48
RATED POWER(W):	150
RATED LOAD SPEED(RPM):	100
RATED LOAD TORQUE(N.m):	10.07
RATED CURRENT(A):	4.00
GEAR RATIO	30
MAX.PERMISSIBLE TORQUE(N.m)	40
AMBIENT TEMPERATURE	-10°C~40°C[14°F~104°F]
INSULATION CLASS	E 120°C[248°F]
TEMPERATURE RISE	MAX.80°C

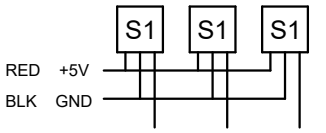

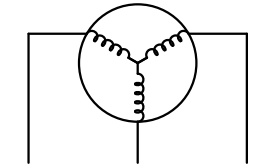

DIMENSIONS ARE IN MILLIMETERS.
TOLERANCES AS BELOW:

DECIMALS		ANGLES
X	±0.5	±2°
X.X	±0.25	
X.XX	±0.13	

THIRD ANGLE PROJECTION

THIS DOCUMENT SHALL NOT BE REPRODUCED NOR SHALL THE INFORMATION CONTAINED HEREIN BE USED BY OR DISCLOSED TO OTHERS UNLESS EXPRESSLY AUTHORIZED IN BY WRITING STEPPERONLINE.

	SIGNATURE	DATE
DRN	MYX	12.25.2025
APVD	LJ	12.25.2025

STEPPERONLINE®

GEARED BLDC MOTOR

F55B150-48GU-30S/5GU30RT

REV.	0	SCALE	1:1	DWG NO.	A5569