MODEL NO.	F6B250-48GU-30S/6GU200K	DWG NO.	A5488

CUSTOMER'S MODEL: NO MODEL
END COVER COLOR: BLUE

REV.	REVISION RECORD	BY	DATE
0	ORIGIN	LJ	12.25.2025

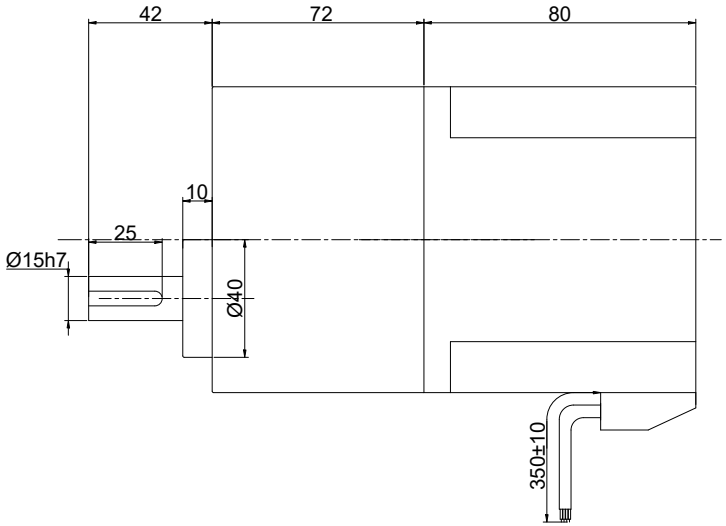

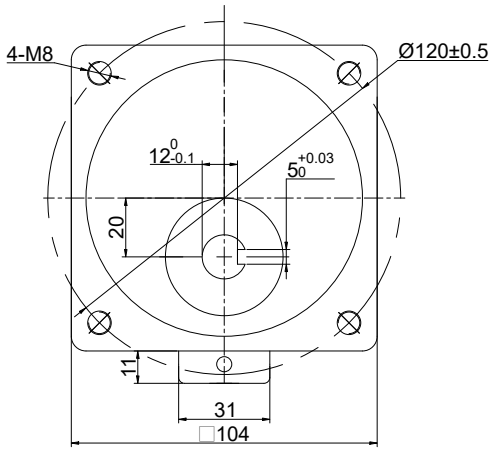

SPECIFICATION	VALUE
NO. of PHASES	3
NO. of POLES	10
RATED VOLTAGE(V):	48
RATED POWER(W):	250
RATED LOAD SPEED(RPM):	15
RATED LOAD TORQUE(N.m):	40.00
RATED CURRENT(A):	6.4
GEAR RATIO	200
MAX.PERMISSIBLE TORQUE(Nm)	40
AMBIENT TEMPERATURE	-10°C~40°C[14°F~104°F]
INSULATION CLASS	E 120°C[248°F]
TEMPERATURE RISE	MAX.80°C

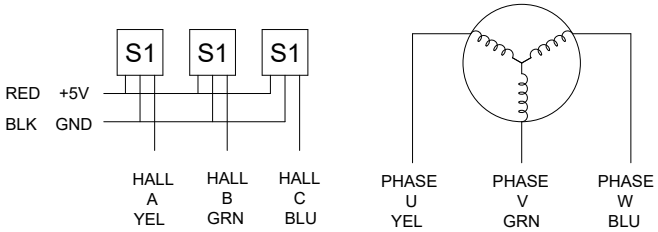

DIMENSIONS ARE IN MILLIMETERS.
TOLERANCES AS BELOW:

DECIMALS		ANGLES
X	±0.5	±2°
X.X	±0.25	
X.XX	±0.13	

THIRD ANGLE PROJECTION

THIS DOCUMENT SHALL NOT BE REPRODUCED NOR SHALL THE INFORMATION CONTAINED HEREIN BE USED BY OR DISCLOSED TO OTHERS UNLESS EXPRESSLY AUTHORIZED IN BY WRITING STEPPERONLINE.

	SIGNATURE	DATE
DRN	LJ	12.25.2025
APVD	YSX	12.25.2025

STEPPERONLINE®

GEARED BLDC MOTOR

F6B250-48GU-30S/6GU200K

REV.	0	SCALE	1:1	DWG NO.	A5488