MODEL NO.	F3B40-24GN-30S/3GN5K	DWG NO.	A5364

CUSTOMER'S MODEL: NO MODEL
END COVER COLOR: BLUE

REV.	REVISION RECORD	BY	DATE
0	ORIGIN	YSX	12.25.2025

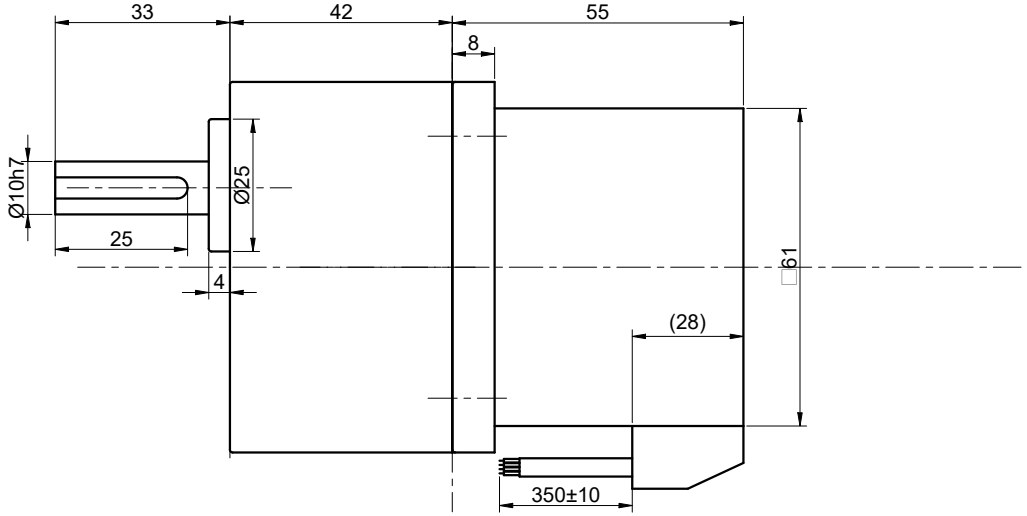

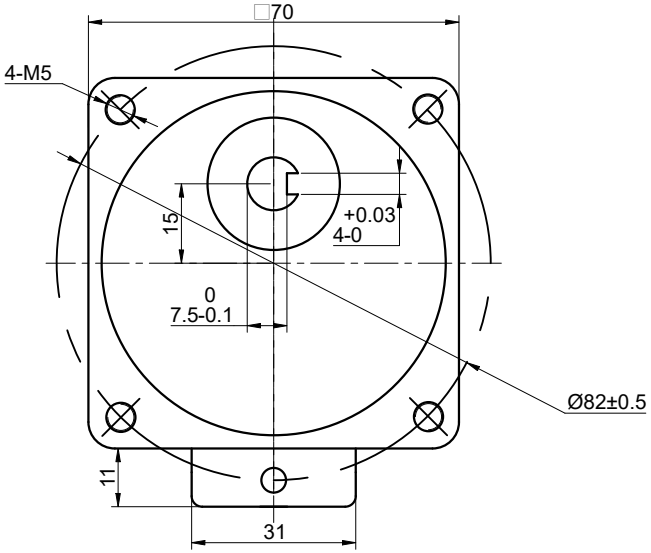

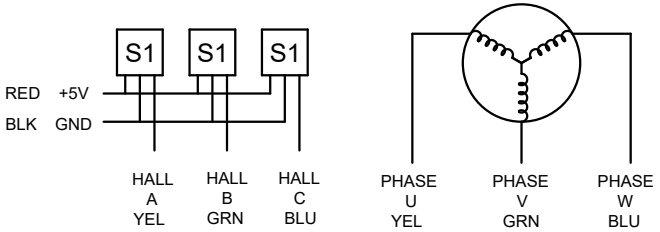

SPECIFICATION	VALUE
NO. of PHASES	3
NO. of POLES	10
RATED VOLTAGE(V):	24
RATED POWER(W):	40
RATED LOAD SPEED(RPM):	600
RATED LOAD TORQUE(N.m):	0.52
RATED CURRENT(A):	2.50
GEAR RATIO	5
MAX.PERMISSIBLE TORQUE(N.m)	5
AMBIENT TEMPERATURE	-10°C~40°C[14°F~104°F]
INSULATION CLASS	E 120°C[248°F]
TEMPERATURE RISE	MAX.80°C

DIMENSIONS ARE IN MILLIMETERS.
TOLERANCES AS BELOW:

DECIMALS		ANGLES
X	±0.5	±2°
X.X	±0.25	
X.XX	±0.13	

THIRD ANGLE PROJECTION

THIS DOCUMENT SHALL NOT BE REPRODUCED NOR SHALL THE INFORMATION CONTAINED HEREIN BE USED BY OR DISCLOSED TO OTHERS UNLESS EXPRESSLY AUTHORIZED IN BY WRITING STEPPERONLINE.

	SIGNATURE	DATE
DRN	YSX	12.25.2025
APVD	ZPJ	1.5.2026

STEPPERONLINE®

GEARED BLDC MOTOR

F3B40-24GN-30S/3GN5K

REV.	0	SCALE	1:1	DWG NO.	A5364