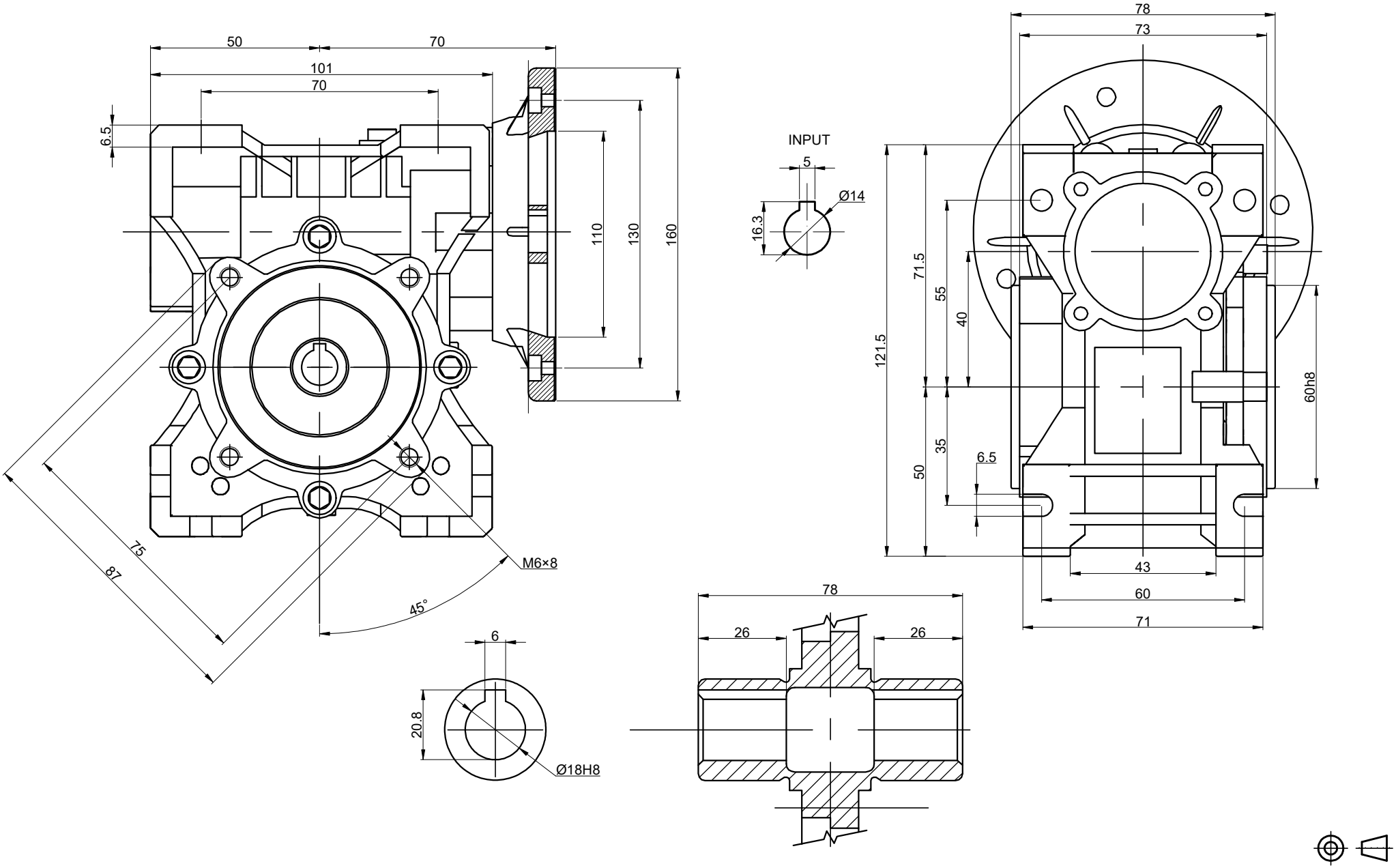

STEPPERONLINE®		APVD	HW	1.23.2024	WORM GEAR SPEED REDUCER
		CHKD			
	2:3	DRN	LDJ	1.19.2024	MRVR040EB3-G50-D14
	SCALE	SIGNATURE		DATE	