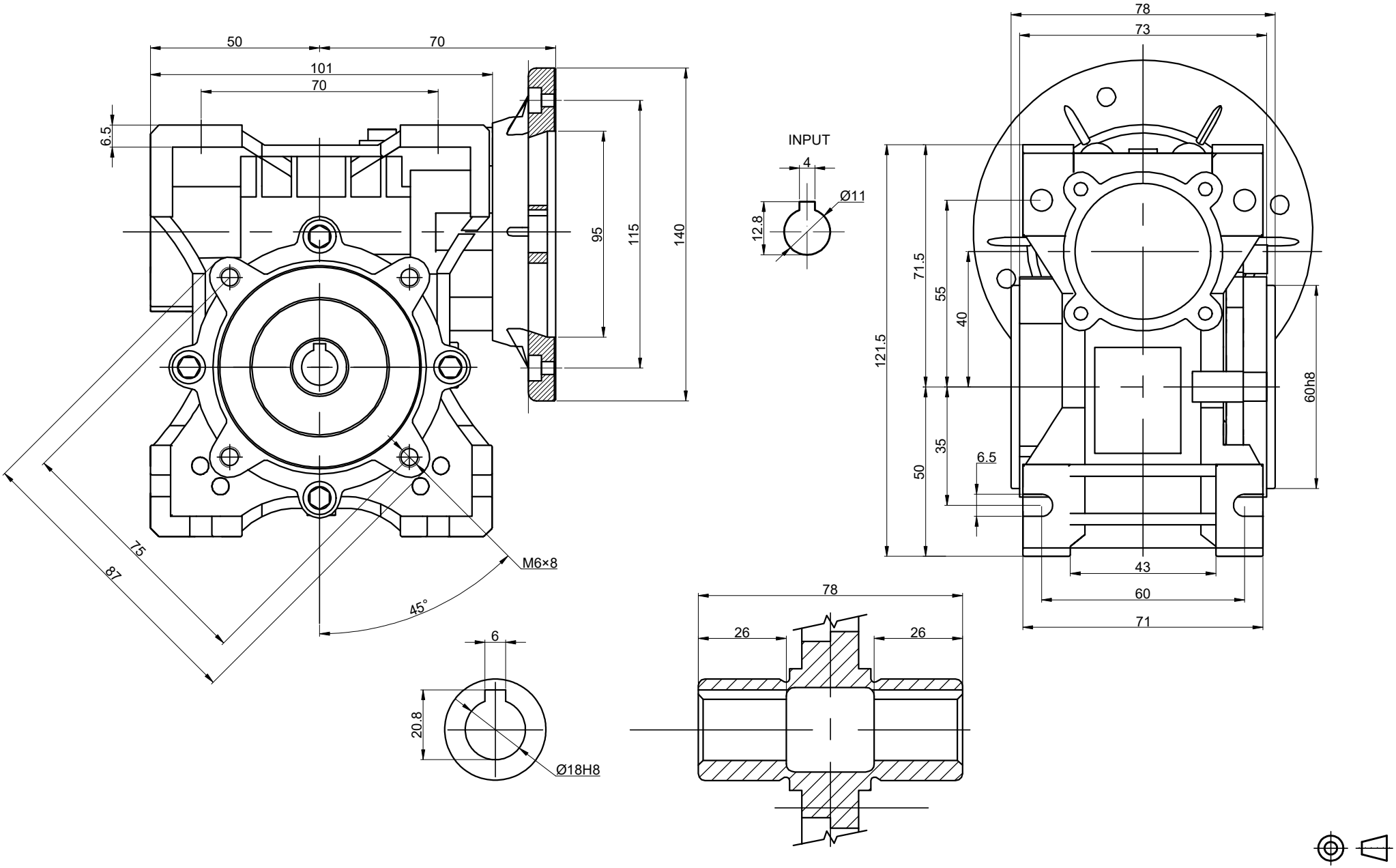


| | | | | |
|---|---|---|---|---|
| STEPPERONLINE® | | APVD | HW | 1.23.2024 |
| | | CHKD | | |
| | 2:3 | DRN | LDJ | 1.19.2024 |
| | SCALE | SIGNATURE | | DATE |

WORM GEAR SPEED REDUCER

MRVR040CB3-G40-D11