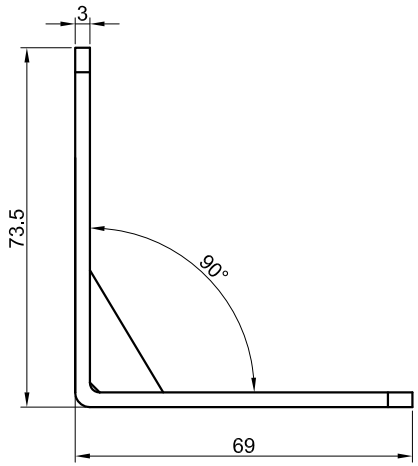

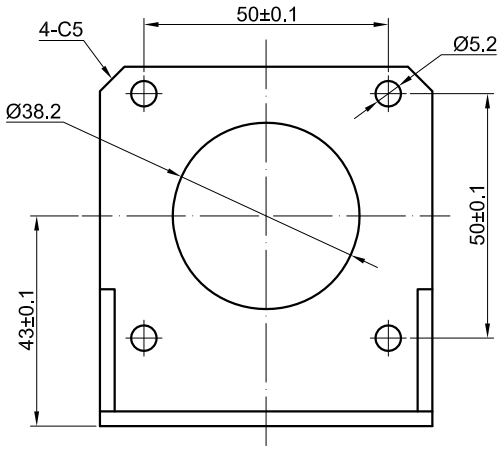

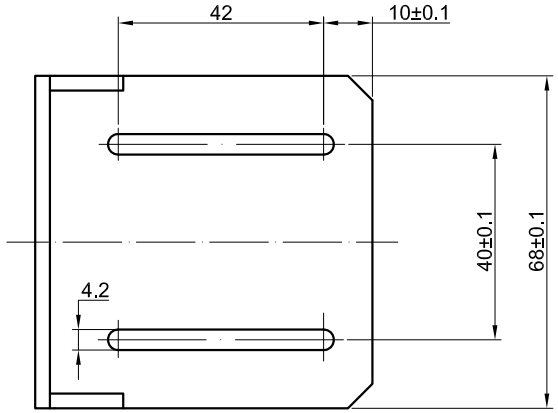

STEPPERONLINE®		APVD		2.28.2022
		CHKD		
	1:1.5	DRN		
	SCALE	SIGNATURE		DATE

MOUNTING BRACKET

ST-M13