LRS-50 series

50W Single Output Switching Power Supply

IS 13252(Part 1):2010/ IEC 60950-1:2005 R-41179035 R33100 RoHS

AS/NZS60950-1 GB4943.1 UL62368-1 TP TC004 IEC62368-1 (for LRS-50-12/24 only)

ECO Automate Industrial Security Network Telecom

Features

- Universal AC input / Full range
- Withstand 300VAC surge input for 5 second
- No load power consumption<0.2W
- Miniature size and 1U low profile
- High operating temperature up to 70℃
- Protections: Short circuit / Overload / Over voltage
- Cooling by free air convection
- Compliance to IEC/BS EN/EN 60335-1(PD3) and IEC/BS EN/EN61558-1, -2-16 for household appliances
- Operating altitude up to 5000 meters (Note.8)
- Withstand 5G vibration test
- High efficiency, long life and high reliability
- LED indicator for power on
- Over voltage category III
- 100% full load burn-in test
- 3 years warranty

Applications

- Industrial automation machinery
- Industrial control system
- Mechanical and electrical equipment
- Electronic instruments, equipments or apparatus
- Household appliances

Description

LRS-50 series is a 50W single-output enclosed type power supply with 30mm of low profile design. Adopting the full range 85~264VAC input, the entire series provides an output voltage line of 3.3V, 5V, 12V, 15V, 24V, 36V and 48V.

In addition to the high efficiency up to 90%, the design of metallic mesh case enhances the heat dissipation of LRS-50 that the whole series operates from -30℃ through 70℃ under air convection without a fan. Delivering an extremely low no load power consumption (less than 0.2W), it allows the end system to easily meet the worldwide energy requirement. LRS-50 has the complete protection functions and 5G anti-vibration capability; it is complied with the international safety regulations such as TUV BS EN/EN62368-1, BS EN/EN60335-1,BS EN/EN61558-1/-2-16, UL62368-1 and GB4943. LRS-50 series serves as a high price-to-performance power supply solution for various industrial applications.

Model Encoding

LRS - 50 - 3.3

- 3.3 — Output voltage
- 50 — Rated wattage
- LRS — Series name

STEPPERONLINE®

SPECIFICATION

MODEL		LRS-50-3.3	LRS-50-5	LRS-50-12	LRS-50-15	LRS-50-24	LRS-50-36	LRS-50-48
OUTPUT	DC VOLTAGE	3.3V	5V	12V	15V	24V	36V	48V
	RATED CURRENT	10A	10A	4.2A	3.4A	2.2A	1.45A	1.1A
	CURRENT RANGE	0 ~ 10A	0 ~ 10A	0 ~ 4.2A	0 ~ 3.4A	0 ~ 2.2A	0 ~ 1.45A	0 ~ 1.1A
	RATED POWER	33W	50W	50.4W	51W	52.8W	52.2W	52.8W
	RIPPLE & NOISE (max.) Note.2	80mVp-p	80mVp-p	120mVp-p	120mVp-p	150mVp-p	200mVp-p	200mVp-p
	VOLTAGE ADJ. RANGE	2.97 ~ 3.6V	4.5 ~ 5.5V	10.2 ~ 13.8V	13.5 ~ 18V	21.6 ~ 28.8V	32.4 ~ 39.6V	43.2 ~ 52.8V
	VOLTAGE TOLERANCE Note.3	±3.0%	±2.0%	±1.0%	±1.0%	±1.0%	±1.0%	±1.0%
	LINE REGULATION Note.4	±0.5%	±0.5%	±0.5%	±0.5%	±0.5%	±0.5%	±0.5%
	LOAD REGULATION Note.5	±2.0%	±1.0%	±0.5%	±0.5%	±0.5%	±0.5%	±0.5%
	SETUP, RISE TIME	1000ms, 30ms/230VAC 2000ms,30ms/115VAC at full load						
	HOLD UP TIME (Typ.)	30ms/230VAC 12ms/115VAC at full load						
INPUT	VOLTAGE RANGE	85 ~ 264VAC 120 ~ 373VDC						
	FREQUENCY RANGE	47 ~ 63Hz						
	EFFICIENCY (Typ.)	80%	83%	86%	88%	88%	89%	90%
	AC CURRENT (Typ.)	0.95A/115VAC 0.56A/230VAC						
	INRUSH CURRENT (Typ.)	COLD START 45A/230VAC						
	LEAKAGE CURRENT	<0.75mA / 240VAC						
PROTECTION	OVER LOAD	110 ~ 150% rated output power						
		Protection type : Hiccup mode, recovers automatically after fault condition is removed						
	OVER VOLTAGE	3.8 ~ 4.45V	5.9~ 7.3V	13.8 ~ 16.2V	18.75 ~ 21.75V	28.8 ~ 33.6V	41.4 ~ 48.6V	55.2 ~ 64.8V
		Protection type : Shut down o/p voltage, re-power on to recover						
ENVIRONMENT	WORKING TEMP.	-30 ~ +70℃ (Refer to "Derating Curve")						
	WORKING HUMIDITY	20 ~ 90% RH non-condensing						
	STORAGE TEMP., HUMIDITY	-40 ~ +85℃, 10 ~ 95% RH non-condensing						
	TEMP. COEFFICIENT	±0.03%/℃ (0 ~ 50℃)						
	VIBRATION	10 ~ 500Hz, 5G 10min./1cycle, 60min. each along X, Y, Z axes						
	OVER VOLTAGE CATEGORY	III; Compliance to BS EN/EN61558, BS EN/EN50178, BS EN/EN60664-1, BS EN/EN62477-1; altitude up to 2000 meters						
SAFETY & EMC (Note 9)	SAFETY STANDARDS	UL62368-1, TUV BS EN/EN62368-1, BS EN/EN60335-1, BS EN/EN61558-1/-2-16,CCC GB4943.1, BSMI CNS14336-1, EAC TP TC 004, AS/NZS 60950.1(by CB),KC K60950-1(for LRS-50-12/24 only), BIS IS13252(Part1): 2010/IEC 60950-1: 2005 approved						
	WITHSTAND VOLTAGE	I/P-O/P:4KVAC I/P-FG:2KVAC O/P-FG:1.25KVAC						
	ISOLATION RESISTANCE	I/P-O/P, I/P-FG, O/P-FG:100M Ohms / 500VDC / 25℃/ 70% RH						
	EMC EMISSION	Compliance to BS EN/EN55032 (CISPR32) Class B, BS EN/EN55014, BS EN/EN61000-3-2,-3, GB/T 9254, BSMI CNS13438, EAC TP TC 020,KC KN32,KN35(for LRS-50-12/24 only)						
	EMC IMMUNITY	Compliance to BS EN/EN61000-4-2,3,4,5,6,8,11, BS EN/EN61000-6-2 (BS EN/EN50082-2), heavy industry level, criteria A, EAC TP TC 020,KC KN32,KN35(for LRS-50-12/24 only)						
OTHERS	MTBF	645K hrs min. MIL-HDBK-217F (25℃)						
	DIMENSION	99*82*30mm (L*W*H)						
	PACKING	0.23Kg; 60pcs/14.8Kg/0.88CUFT						

NOTE

1. All parameters NOT specially mentioned are measured at 230VAC input, rated load and 25℃ of ambient temperature.
2. Ripple & noise are measured at 20MHz of bandwidth by using a 12" twisted pair-wire terminated with a 0.1uf & 47uf parallel capacitor.
3. Tolerance : includes set up tolerance, line regulation and load regulation.
4. Line regulation is measured from low line to high line at rated load.
5. Load regulation is measured from 0% to 100% rated load.
6. Length of set up time is measured at cold first start. Turning ON/OFF the power supply very quickly may lead to increase of the set up time.
7. 3.3V,5V when the load factor 0~50%, the switching power less is reduced by burst operation, which will cause ripple and ripple noise to go beyond the specifications.
8. The ambient temperature derating of 5℃/1000m is needed for operating altitude greater than 2000m(6500ft).
9. The power supply is considered a component which will be installed into a final equipment. All the EMC tests are been executed by mounting the unit on a 360mm*360mm metal plate with 1mm of thickness. The final equipment must be re-confirmed that it still meets EMC directives. For guidance on how to perform these EMC tests, please refer to "EMI testing of component power supplies." (as available on http://www.meanwell.com)

※ Product Liability Disclaimer : For detailed information, please refer to https://www.meanwell.com/serviceDisclaimer.aspx

STEPRONLINE®

Block Diagram

fosc : 115Vac : 75KHz
230Vac :110KHz

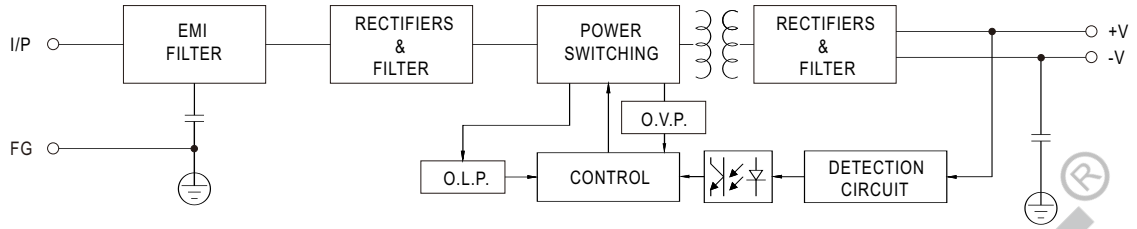

Derating Curve

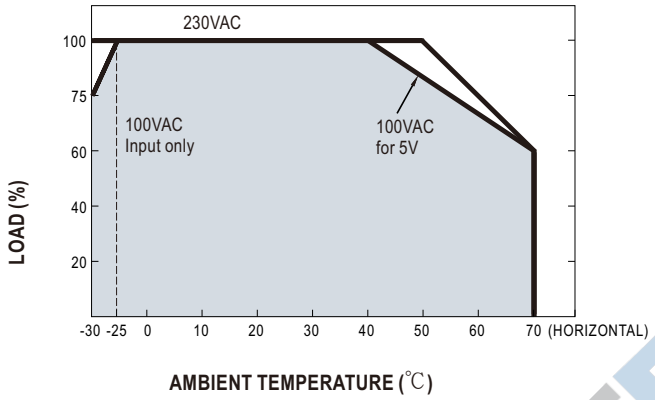

Static Characteristics

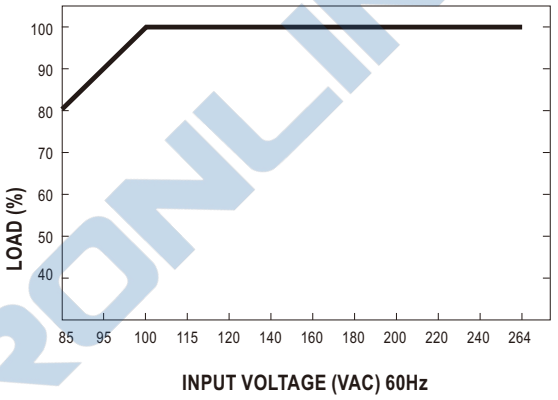

STEPPERONLINE®

■ Mechanical Specification

Case No.239A Unit:mm

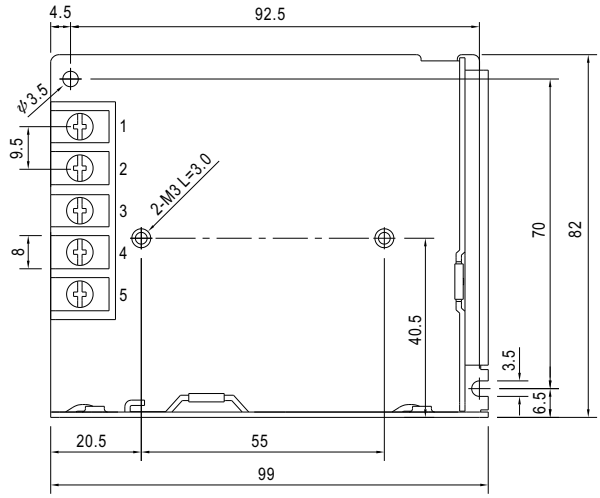

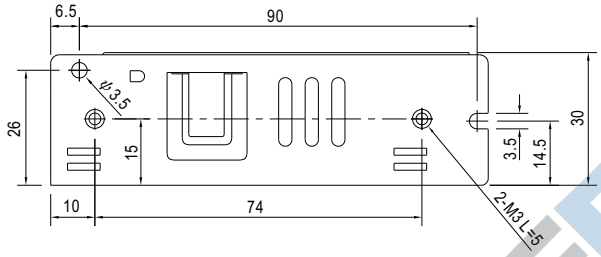

Terminal Pin No. Assignment

Pin No.	Assignment	Pin No.	Assignment
1	AC/L	4	DC OUTPUT -V
2	AC/N	5	DC OUTPUT +V
3	FG ⏚		

■ Installation Manual

Please refer to : http://www.meanwell.com/manual.html

STEPPERONLINE®